ZOOREN®

中仁电气

ZOOREN ELECTRIC

产品快速选型手册

Product Quick Selection Manual

华匠系列

Huajiang Series

江苏省中仁电气有限公司

JIANGSU ZOOREN ELECTRIC CO., LTD

企业简介 Company profile

江苏省中仁电气有限公司成立于2007年3月，总部位于苏州相城经济技术开发区，生产基地位于芜湖市，占地面积3万余平方米，建筑面积2万余平方米。

中仁电气专注于高低压电器高端市场，主要从事配电电器、终端电器、中压电器、工业控制与保护四大类产品研发、制造、销售、服务为一体的数字化智能制造企业。产品广泛应用于电力、新能源、建筑、工业、基础设施等领域。

中仁电气始终坚持以市场为导向，自主研发创新，公司拥有自主研发平台，掌握断路器的核心技术，并形成了强大的技术研发能力和核心团队。

中仁电气通过了ISO9001、ISO14001、ISO45001体系认证，并被授予“高新技术企业”、“智能型断路器工程技术研究中心”、“江苏省科技中小型企业”、“江苏省民营科技型企业”等荣誉称号。

JIANGSU ZOOREN ELECTRIC CO., LTD was established in March 2007, headquartered in Xiangcheng Economic and Technological Development Zone, Suzhou. Its production base is located in Wuhu City, covering an area of over 30000m^2 and a building area of over 20000m^2.

ZOOREN Electric is digital intelligent manufacturing enterprise focusing on the high-end market of high and low voltage electrical appliances, mainly engaged in the research and development, manufacturing, sales and service of four major categories of products: distribution appliances, terminal appliances, medium voltage appliances, and industrial control and protection. The products have been widely used in fields such as electricity, new energy, construction, industry and infrastructure.

ZOOREN Electric always adheres to market-oriented approach, independent research and innovation. The company has an independent research and development platform, masters the core technology of circuit breakers, and has formed a strong technical research and development capability and core team.

ZOOREN Electric has passed the IS09001, IS014001 and IS045001 system certifications and has been awarded honorary titles such as "High-tech Enterprise", "Intelligent Circuit Breaker Engineering Technology Research Center", "Jiangsu Province Small and Medium -sized Science and Technology Enterprise" and "Jiangsu Province Private Science and Technology Enterprise".

企业荣誉 Corporate honors

企业文化 Corporate culture

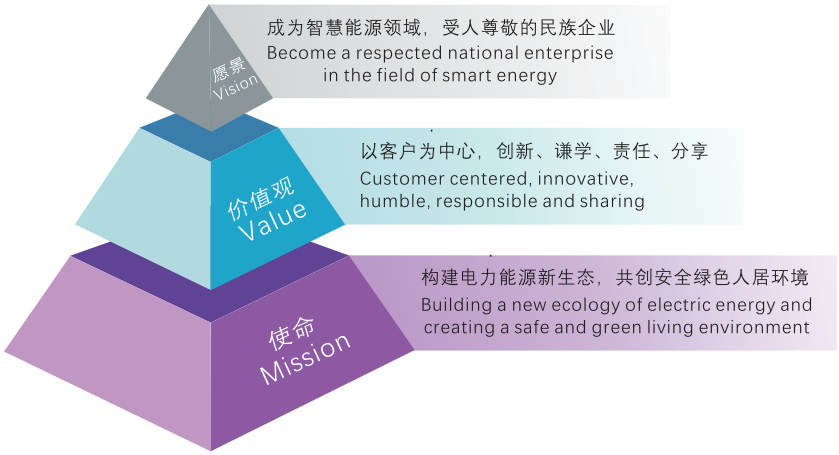




部分重点案例
PARTIAL KEY CASES

房地产行业
Real estate industry

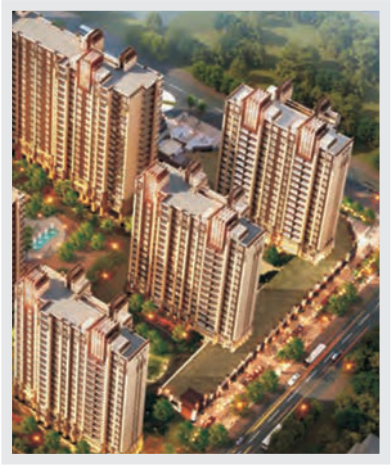

住宅类建筑 Residential building	恒大地产集团有限公司 Evergrande Real Estate Group Co., Ltd
住宅类建筑 Residential building	万达地产集团 Wanda Real Estate Group
住宅类建筑 Residential building	万科企业股份有限公司 Vanke Co., Ltd
住宅类建筑 Residential building	保利房地产（集团）股份有限公司 Poly Real Estate (Group) Co., Ltd
住宅类建筑 Residential building	碧桂园房地产开发有限公司 Country Garden Real Estate Development Co., Ltd
住宅类建筑 Residential building	方圆地产控股有限公司 Fineland Real Estate Holdings Co., Ltd
住宅类建筑 Residential building	广东方直集团有限公司 Guangdong Feithland Group Co., Ltd
住宅类建筑 Residential building	广州富力地产股份有限公司 Guangzhou R&F Real Estate Co., Ltd
住宅类建筑 Residential building	合景泰富地产控股有限公司 KWG Real Estate Holdings Limited
住宅类建筑 Residential building	合生创展集团有限公司 HOPSON Group Co., Ltd
住宅类建筑 Residential building	佳兆业集团控股有限公司 Kaisa Group Holdings Limited
住宅类建筑 Residential building	雅居乐地产置业有限公司 Agile Group Holdings Limited
住宅类建筑 Residential building	招商房地产有限公司 Merchants Investment Real Estate Co., Ltd
住宅类建筑 Residential building	建业住宅集团（中国）有限公司 Construction Industry Residential Group (China) Co., Ltd
住宅类建筑 Residential building	郑州市永威置业有限公司 Zhengzhou Yongwei Property Co., Ltd.
住宅类建筑 Residential building	中国海外发展有限公司 China Overseas Land & Investment Ltd.

电力行业
Power industry

南方电网•广东电网公司 China Southern Power Grid•Guangdong Power Grid Company	广州供电局 Guangzhou Power Supply Bureau
南方电网•广东电网公司 China Southern Power Grid•Guangdong Power Grid Company	深圳供电局 Shenzhen Power Supply Bureau
南方电网•广东电网公司 China Southern Power Grid•Guangdong Power Grid Company	东莞供电局 Dongguan Power Supply Bureau
南方电网•广东电网公司 China Southern Power Grid•Guangdong Power Grid Company	佛山供电局 Foshan Power Supply Bureau
南方电网•广东电网公司 China Southern Power Grid•Guangdong Power Grid Company	珠海供电局 Zhuhai Power Supply Bureau
南方电网•云南电网公司 China Southern Power Grid•Yunnan Power Grid Company	楚雄供电局 Chuxiong Power Supply Bureau
南方电网•海南电网公司 China Southern Power Grid•Hainan Power Grid Company	海口供电局 Haikou Power Supply Bureau
南方电网•贵州电网公司 China Southern Power Grid•Guizhou Power Grid Company	贵阳供电局 Guiyang Power Supply Bureau
南方电网•广西电网公司 China Southern Power Grid•Guangxi Power Grid Company	南宁供电局 Nanning Power Supply Bureau
国家电网•四川电力公司 State Grid•Sichuan Electric Power Company	自贡供电公司 Zigong Power Supply Company
国家电网•山东电力公司 State Grid•Shandong Electric Power Company	滨州电力局 Binzhou Electric Power Bureau
国家电网•江苏电力公司 State Grid•Jiangsu Electric Power Company	苏州供电公司 Suzhou Power Supply Company
国家电网•湖南电力公司 State Grid•Hunan Electric Power Company	长沙供电局 Changsha Power Supply Bureau
国家电网•湖北电力公司 State Grid•Hubei Electric Power Company	武汉供电公司 Wuhan Power Supply Company
国家电网•河南电力公司 State Grid•Henan Electric Power Company	郑州供电公司 Zhengzhou Power Supply Company
国家电网•河南电力公司 State Grid•Henan Electric Power Company	河南荥阳供电局 Xingyang Power Supply Bureau

部分重点案例
PARTIAL KEY CASES

公用及商业建筑
Public and commercial building

机构组织建筑 Organization building	辛亥革命纪念馆 The 1911 Revolution Memorial Hall
机构组织建筑 Organization building	广东电视塔 Guangdong TV Tower
机构组织建筑 Organization building	广东省国土资源厅 Department of Natural Resources of Guangdong Province
机构组织建筑 Organization building	广州市电视台 Guangzhou Television Station
机构组织建筑 Organization building	广州市委大院 Guangzhou Municipal Party Committee Courtyard
机构组织建筑 Organization building	海口税务局 Haikou Taxation Bureau
机构组织建筑 Organization building	中国人民解放军75753部队 Chinese People's Liberation Army 75753 Unit
交通运输类建筑 Transportation related building	佛山广中高速路 Foshan Guangzhong Highway
交通运输类建筑 Transportation related building	广州火车站 Guangzhou Railway Station
交通运输类建筑 Transportation related building	武汉地铁21号线 Wuhan Metro Line 21
交通运输类建筑 Transportation related building	武汉机场 Wuhan Airport
交通运输类建筑 Transportation related building	湛江火车南站 Zhanjiang South Railway Station
科教文卫建筑 Technology, education, culture, health and construction	广东体育馆 Guangdong Stadium
科教文卫建筑 Technology, education, culture, health and construction	武汉理工大学 Wuhan University of Technology
科教文卫建筑 Technology, education, culture, health and construction	新疆传染病医院 Xinjiang Infectious Disease Hospital
科教文卫建筑 Technology, education, culture, health and construction	新疆医科大第六附属医院 Xinjiang Medical University No. 6 Affiliated Hospital

工业
Industry

冶金矿产 Metallurgical and mineral industry	山东日照钢铁控股集团有限公司 SD Steel Group Rizhao Co., Ltd
冶金矿产 Metallurgical and mineral industry	河南济源钢铁（集团）有限公司 Henan Jiyuan Iron & Steel (Group) Co., Ltd
冶金矿产 Metallurgical and mineral industry	广东韶钢华欣有限公司 Guangdong Shaogang Huaxin Co., Ltd
轻工食品 Light industry & food	广纸集团 Guangzhou Paper Group Ltd.
轻工食品 Light industry & food	山东太阳宏河纸业有限公司 Shandong Taiyang Honghe Paper Industry Co., Ltd
轻工食品 Light industry & food	山东中茂圣源纸浆有限公司 Shandong Zhongmao Shengyuan Pulp Co., Ltd
轻工食品 Light industry & food	驻马店市白云纸业有限公司 Zhumadian Baiyun Paper Industry Co., Ltd
机械机电 Mechanical & electromechanical	广州中船黄埔造船厂 Guangzhou CSSC Huangpu Shipbuilding Factory
机械机电 Mechanical & electromechanical	武船重型工程股份有限公司 Wuchuan Heavy Engineering Co., Ltd
新能源•充电桩 New energy•charging station	佛山顺德公交公司充电桩 Foshan Shunde Public Transport Company charging station
新能源•充电桩 New energy•charging station	海南省电动汽车充电桩 Hainan Electric Vehicle Charging Station
新能源•充电桩 New energy•charging station	济南公交公司充电桩 Jinan Public Transport Company charging station
新能源•风电 New energy•wind power	华电哈密风电有限公司 Huadian Hami Wind Power Co., Ltd
新能源•风电 New energy•wind power	新疆哈密十三间房风电场箱变工程 Xinjiang Hami Thirteen Room Wind Farm Box Substation Project
新能源•光伏 New energy•photovoltaic	华电福新江门能源公司 Huadian Fuxin Jiangmen Energy Company
新能源•光伏 New energy•photovoltaic	武汉日新科技股份有限公司 Wuhan Rixin Technology Co., Ltd

目录 / CONTENTS

附件指示图
Accessory instruction diagram

SZRW8系列智能型万能式断路器附件指示图　SZRW8 Series intelligent air circuit breaker accessory instruction diagram

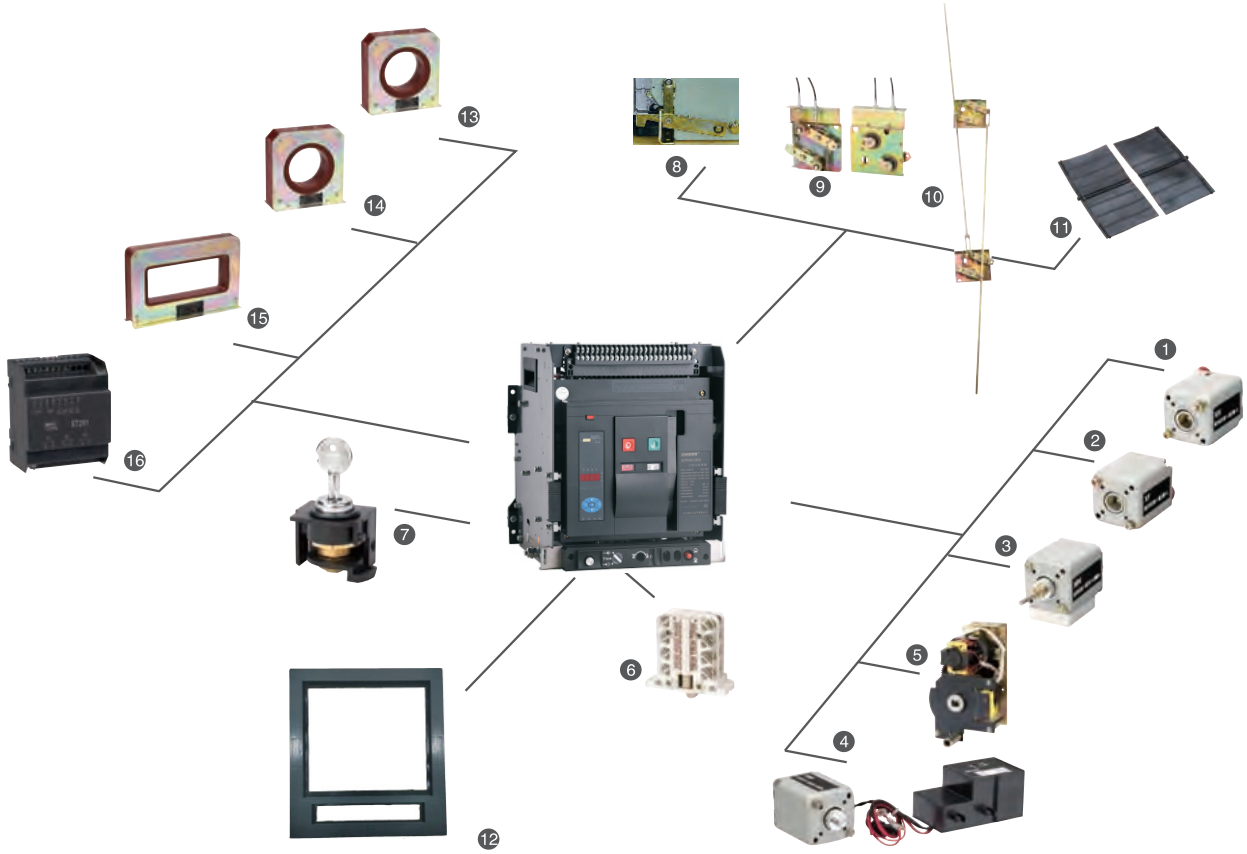

远程操作 Remote operation	指示触点 Indicating contact	锁 Lock	机械联锁 Mechanical interlock	操作及防护 Operation and protection	智能控制器附件 Intelligent controller accessory
1 分励线圈 Shut coil	6 辅助开关(OF) Auxiliary switch (OF)	7 分闸锁 Opening lock	9 杠杆联锁 Lever interlock	11 相间隔板 Interphase partition	13 N相外接互感器 N phase external transformer
2 合闸线圈 Closing coil		8 门联锁 Door interlock	10 钢绳联锁 Steel rope interlock	12 门框 Door frame	14 漏电互感器 Leakage current transformer
3 欠压线圈 Undervoltage coil					15 接地互感器 Grounding transformer
4 欠压延时线圈 Undervoltage delay coil					16 电源模块 Power module
5 电动机操作结构 Motor operating mechanism					

注: 1.SZRW8-1000型无 ❹❼❽❿ 附件
2.SZRW8-1000型 ❾ 仅有两台钢绳联锁
3.SZRW8-2000型及以上❿ 仅有两台杠杆联锁

Note: 1 SZRW8-1000 type has no ❹❼❽❿ accessories
2. SZRW8-1000 type ❾ only has two steel rope interlocks
3. SZRW8-2000 and above type ❿ only has two lever interlocks

编码原则 Coding principle

SZRW8系列智能型万能式断路器 SZRW8 Series intelligent air circuit breaker

产品名称 Product name	壳架等级 Frame size	极数 No. of poles	额定电流 Rated current	安装方式 Installation method	控制器类型 Controller type	控制电压:电操，合分闸 Control voltage: electric operation, closing and opening
SZRW8	2000	3P	1600A	抽屉水平 Draw-out horizontal	M型 M type	AC230V
	10: 1000型 20:2000型 25:2500型 25R:2500R型 32:3200型 40:4000型 63:6300型 63R:6300R型 10: 1000 type 20: 2000 type 25:2500 type 25R: 2500R type 32:3200 type 40:4000 type 63:6300 type 63R: 6300R type	3:3P 4:4P	1000型: 1000 Type: 02:200A,03:315A, 04:400A,06:630A, 08:800A,10:1000A 2000型: 2000 type: 06:630A,08:800A, 10:1000A,12:1250A, 16:1600A,20:2000A 2500,2500R型: 2500,2500R type: 06:630A,08:800A, 10:1000A,12:1250A, 16:1600A,20:2000A 25:2500A 3200型: 3200 type: 20:2000A,25:2500A, 29:2900A,32:3200A 4000型: 4000 type: 32:3200A,36:3600A, 40:4000A 6300,6300R型: 6300,6300R type: 40:4000A, 50:5000A, 63:6300A	CP:抽屉水平 CZ:抽屉垂直 GP:固定水平 GZ:固定垂直 CP: Draw-out and horizontal CZ: Draw-out and vertical GP: Fixed and horizontal GZ: Fixed and vertical	M:M型 2M:2M型 2H:2H型 3M:3M型 3H:3H型 M: M type 2M: 2M type 2H: 2H type 3M: 3M type 3H: 3H type	2A:AC230V 4A:AC400V 2D:DC220V
W8	20	3	16	CP	M	2A

订货代号即: W820316CPM2A
Order code: W820316CPM2A

技术参数 Technical parameter

极数：3、4
额定绝缘电压(V)Ui：1000
额定冲击耐受电压(kV)Uimp：12
额定工作电压(V)Ue：400、690
适用于隔离：
选择性类别：B
环境：使用环境温度: -5℃至+40℃
可运行条件：周围空气温度可低至-25℃、高至+70℃(超过+40℃降容使用)
海拔高度：≤2000m
海拔至2500m特性不受影响(超过2500m降容使用)
符合GB/T14048.2/IEC60947-2的断路器特性
认证

No. of poles : 3,4
Rated insulation voltage (V) Ui: 1000
Rated impulse withstand voltage (kV) Uimp: 12
Rated working voltage (V) Ue: 400,690
Suitable for isolation:
Selective category: B
Environment: Operating ambient temperature: -5℃ to +40℃
Operating condition: The ambient air temperature can be as low as -25℃ and as high as +70℃
(the capacity should be reduced for use beyond +40℃)
Altitude: ≤2000m
The characteristic is not affected from an altitude up to 2500m (the capacity should be reduced for use beyond 2500m)
It conforms to circuit breaker characteristic of GB/T14048.2/IEC60947-2
Certificate

壳架电流 Frame current		1000	2000	2000R	2500	2500R	3200	4000	6300	6300R
额定电流In (A) Rated current In (A)		200,315 400,630 800,1000	630,800 1000,1250 1600,2000		630,800,1000 1250,1600 2000,2500		2000,2500 2900,3200	3200,3600 4000	4000,5000 6300	
额定极限短路分断能力Icu (kA) Rated ultimate short circuit breaking capacity Icu (kA)	400V	50	80	80	86	86	100	100	135	150
	690V	/	/	/	66	66	66	/	/	120
额定运行短路分断能力Ics (kA) Rated service short circuit breaking capacity Ics (kA)	400V	50	50	65	66	86	80	80	135	150
	690V	/	/	/	56	66	66	/	/	120
额定短时耐受电流Icw(1s)(kA) Rated short-time withstand current Icw (1s) (kA)	400V	42	50	65	66	86	80	80	135	135
	690V	/	/	/	56	66	66	/	/	120

使用寿命 Service life		1000	2000	2000R	2500	2500R	3200	4000	6300	6300R
机械寿命 Mechanical life	不维护 Maintenance-free	10000	15000		15000		10000	10000	2500	
	维护 With maintenance	20000	30000		30000		20000	20000	5000	
电气寿命 Electrical life	400V/690V	6000	8000		8000		7000	6000	1000	

合分闸时间 Closing and opening time	
分断时间ms Breaking time ms	≤30
合闸时间ms Closing time ms	≤60

功能概述 Function overview

智能控制器 Intelligent controller

	SZRW8-M	SZRW8-2M	SZRW8-2H
	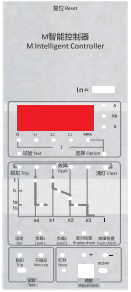	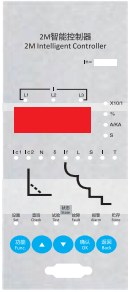	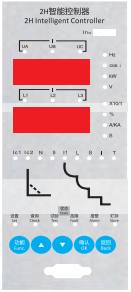
基本功能 Basic function	过载长延时保护 短路短延时保护 短路瞬时保护 接地保护(差值型) LED数码管显示 按键整定方式 电流表功能 试验功能 故障记忆功能 热记忆功能 Overload long delay protection Short circuit short delay protection Short circuit instantaneous protection Ground protection (differential type) LED digital display Button setting method Ammeter function Test function Fault memory function Thermal memory function	过载长延时保护 短路短延时保护 短路瞬时保护 接地保护(差值型) LED数码管显示 按键整定方式 电流表功能 试验功能 故障记忆功能 热记忆功能 时钟功能 自诊断功能 触头模式及机械动作次数 Overload long delay protection Short circuit short delay protection Short circuit instantaneous protection Ground protection (differential type) LED digital display Button setting method Ammeter function Test function Fault memory function Thermal memory function Clock function Self-diagnostic function Contact mode and number of mechanical operations	过载长延时保护 短路短延时保护 短路瞬时保护 接地保护(差值型) LED数码管显示 按键整定方式 电流表功能 试验功能 故障记忆功能 热记忆功能 时钟功能 自诊断功能 触头模式及机械动作次数 通讯功能 Overload long delay protection Short circuit short delay protection Short circuit instantaneous protection Ground protection (differential type) LED digital display Button setting method Ammeter function Test function Fault memory function Thermal memory function Clock function Self-diagnostic function Contact mode and number of mechanical operations Communication function
增选功能 Optional function	MCR接通分断及越限跳闸 触点输出 电压功能 剩余电流型漏电保护 时钟功能 电流不平衡保护 远程复位功能 负载监控功能 3P+N型中性线保护 低电压穿越 MCR on/off and overlimit tripping Contact output Voltage function Residual current type leakage protection Clock function Current imbalance protection Remote reset function Load monitoring function 3P+N type neutral line protection Low voltage ride through	MCR接通分断及越限跳闸 触点输出 电压功能 剩余电流型漏电保护 时钟功能 电流不平衡保护 远程复位功能 负载监控功能 3P+N型中性线保护 低电压穿越 MCR on/off and overlimit tripping Contact output Voltage function Residual current type leakage protection Clock function Current imbalance protection Remote reset function Load monitoring function 3P+N type neutral line protection Low voltage ride through	MCR接通分断及越限跳闸 触点输出 电压功能 剩余电流型漏电保护 时钟功能 电流不平衡保护 远程复位功能 负载监控功能 3P+N型中性线保护 低电压穿越 MCR on/off and overlimit tripping Contact output Voltage function Residual current type leakage protection Clock function Current imbalance protection Remote reset function Load monitoring function 3P+N type neutral line protection Low voltage ride through

增选附件 Optional accessory	直流电源模块(DC110V/220V) 外接N相互感器 地电流互感器 ZT100 剩余电流互感器 ZCT1 ST201 继电器模块 ST-4 电源模块 ST 手持编程器 DC power module (DC110V/220V) External N phase transformer Ground current transformer ZT100 Residual current transformer ZCT1 ST201 relay module ST-4 power module ST handheld programmer	直流电源模块(DC110V/220V) 外接N相互感器 地电流互感器 ZT100 剩余电流互感器 ZCT1 ST201 继电器模块 ST-4 电源模块 ST 手持编程器 DC power module (DC110V/220V) External N phase transformer Ground current transformer ZT100 Residual current transformer ZCT1 ST201 relay module ST-4 power module ST handheld programmer	直流电源模块(DC110V/220V) 外接N相互感器 地电流互感器 ZT100 剩余电流互感器 ZCT1 ST201 继电器模块 ST-4 电源模块 ST 手持编程器 DC power module (DC110V/220V) External N phase transformer Ground current transformer ZT100 Residual current transformer ZCT1 ST201 relay module ST-4 power module ST handheld programmer

注:
1. 3P+N中性线保护、地电流型漏电保护、剩余电流漏电功能只选其一， 需增选相应互感器附件。
2.信号单元S1,S2,S3只选其一。
3.智能控制器详细说明请阅读《SZRW8系列智能型控制器使用说明书》。
4. SZRW8-1000型仅有M型控制器。
5. SZRW8-1000型无漏电保护功能。
6. SZRW8-1000型用于发电机场合并带欠压保护功能时需外加电源模块。

Note:
1. Only one of 3P+N neutral line protection, ground current leakage protection and residual current leakage function is selected, and corresponding transformer accessory need to be added.
2. Only one of the signal units S1, S2 and S3 is selected.
3. For detailed instructions on the intelligent controller, please refer to the *SZRW8 Series Intelligent Controller User's Manual*.
4. The SZRW8-1000 type only has M type controller.
5. SZRW8-1000 type has no leakage protection function.
6. When the SZRW8-1000 type is used for power generator condition with undervoltage protection function, external power module is required.

功能概述 Function overview

智能控制器 Intelligent controller

SZRW8-3M

SZRW8-3H

基本功能 Basic function	负载监控（电流方式一） 多曲线长延时保护 多曲线短延时反时限保护 短延时定时限保护 瞬时保护 电流不平衡（断相）保护 接地保护（缺省为T型） 接地报警 中性相保护 四相电流及接地电流测量 热容量 八次故障、报警、变位记录 电流历史峰值 触头当量 操作次数 时钟功能 自诊断 中/英文图形液晶显示 LCD状态指示 键盘操作 Load monitoring (current mode 1) Multi-curve long delay protection Multi-curve short delay inverse time limit protection Short delay definite time limit protection Instantaneous protection Current imbalance (phase failure) protection Ground protection (default T type) Grounding alarm Neutral phase protection Four-phase current and grounding current measurement Thermal capacity Eight fault, alarm and displacement records Historical peak current value Contact equivalent Number of operations Clock function Self-diagnosis Chinese/English graphic LCD display LCD status indication Keyboard operation	负载监控（电流方式一） 多曲线长延时保护 多曲线短延时反时限保护 短延时定时限保护 瞬时保护 电流不平衡（断相）保护 接地保护（缺省为T型） 接地报警 中性相保护 四相电流及接地电流测量 热容量 八次故障、报警、变位记录 电流历史峰值 触头当量 操作次数 时钟功能 自诊断 中/英文图形液晶显示 LCD状态指示 键盘操作 通讯功能 Load monitoring (current mode 1) Multi-curve long delay protection Multi-curve short delay inverse time limit protection Short delay definite time limit protection Instantaneous protection Current imbalance (phase failure) protection Ground protection (default T type) Grounding alarm Neutral phase protection Four-phase current and grounding current measurement Thermal capacity Eight fault, alarm and displacement records Historical peak current value Contact equivalent Number of operations Clock function Self-diagnosis Chinese/English graphic LCD display LCD status indication Keyboard operation Communication function

增选功能 Optional function	功能表：D、U、UD、P、PD、H、HD选其一 （见功能表介绍） 信号单元：S1、 S2、 S3 负载监控：电流方式二 3P+N型中性线保护 地电流型漏电保护 剩余电流型漏电保护 远程复位功能 Function meter: Choose one of D, U, UD, P, PD, H, HD (see function meter introduction) Signal unit: S1, S2, S3 Load monitoring: current mode 2 3P+N type neutral line protection Ground current type leakage protection Residual current type leakage protection Remote reset function	功能表：D、U、UD、P、PD、H、HD选其一 （见功能表介绍） 信号单元：S1、 S2、 S3 负载监控：电流方式二 3P+N型中性线保护 地电流型漏电保护 剩余电流型漏电保护 远程复位功能 Profibus-DP通讯协议 Device-net通讯协议 Function meter: Choose one of D, U, UD, P, PD, H, HD (see function meter introduction) Signal unit: S1, S2, S3 Load monitoring: current mode 2 3P+N type neutral line protection Ground current type leakage protection Residual current type leakage protection Remote reset function Profibus-DP communication protocol Device-net communication protocol	
增选附件 Optional accessory	直流电源模块(DC110V/220V) 外接N相互感器 地电流互感器 ZT100 剩余电流互感器 ZCT1 ST201 继电器模块 ST-4 电源模块 ST 手持编程器 DC power module (DC110V/220V) External N phase transformer Ground current transformer ZT100 Residual current transformer ZCT1 ST201 relay module ST-4 power module ST handheld programmer	直流电源模块(DC110V/220V) 外接N相互感器 地电流互感器 ZT100 剩余电流互感器 ZCT1 ST201 继电器模块 选择性区域连锁保护装置 DC power module (DC110V/220V) External N phase transformer Ground current transformer ZT100 Residual current transformer ZCT1 ST201 relay module Zone selective interlocking protection device	直流电源模块(DC110V/220V) 外接N相互感器 地电流互感器 ZT100 剩余电流互感器 ZCT1 ST201 继电器模块 选择性区域连锁保护装置 DC power module (DC110V/220V) External N phase transformer Ground current transformer ZT100 Residual current transformer ZCT1 ST201 relay module Zone selective interlocking protection device

功能表 Function meter

D		U	UD	P	PD	H	HD
需用值测量(电流) Required value measurement (current) 需用值保护 Required value protection	电压测量 频率测量 电压不平衡率测量 相序检测 过压保护 欠压保护 电压不平衡保护 过频保护 欠频保护 相序保护 Voltage measurement Frequency measurement Voltage imbalance rate measurement Phase sequence detection Overvoltage protection Undervoltage protection Voltage imbalance protection Overfrequency protection Underfrequency protection Phase sequence protection	电压测量 频率测量 电压不平衡率测量 相序检测 电流需用值测量 过压保护 欠压保护 电压不平衡保护 过频保护 欠频保护 相序保护 需用保护 Voltage measurement Frequency measurement Voltage imbalance rate measurement Phase sequence detection Current required value measurement Overvoltage protection Undervoltage protection Voltage imbalance protection Overfrequency protection Underfrequency protection Phase sequence protection Required value protection	电压测量 频率测量 电压不平衡率测量 相序检测 功率测量 功率因数测量 电能测量 过压保护 欠压保护 电压不平衡保护 过频保护 欠频保护 相序保护 逆功率保护 Voltage measurement Frequency measurement Voltage imbalance rate measurement Phase sequence detection Power measurement Power factor measurement Electric energy measurement Overvoltage protection Undervoltage protection Voltage imbalance protection Overfrequency protection Underfrequency protection Phase sequence protection Reverse power protection	电压测量 频率测量 电压不平衡率测量 相序检测 功率测量 功率因数测量 电能测量 需用值测量(电流、功率) 过压保护 欠压保护 电压不平衡保护 过频保护 欠频保护 相序保护 逆功率保护 需用值保护 Voltage measurement Frequency measurement Voltage imbalance rate measurement Phase sequence detection Power measurement Power factor measurement Electric energy measurement Required value measurement (current, power) Overvoltage protection Undervoltage protection Voltage imbalance protection Overfrequency protection Underfrequency protection Phase sequence protection Reverse power protection Required value protection	电压测量 频率测量 电压不平衡率测量 相序检测 功率测量 功率因数测量 电能测量 谐波测量 过压保护 欠压保护 电压不平衡保护 过频保护 欠频保护 相序保护 逆功率保护 Voltage measurement Frequency measurement Voltage imbalance rate measurement Phase sequence detection Power measurement Power factor measurement Electric energy measurement Harmonic measurement Overvoltage protection Undervoltage protection Voltage imbalance protection Overfrequency protection Underfrequency protection Phase sequence protection Reverse power protection	电压测量 频率测量 电压不平衡率测量 相序检测 功率测量 功率因数测量 电能测量 需用值测量(电流、功率) 谐波测量 过压保护 欠压保护 电压不平衡保护 过频保护 欠频保护 相序保护 逆功率保护 需用值保护 Voltage measurement Frequency measurement Voltage imbalance rate measurement Phase sequence detection Power measurement Power factor measurement Electric energy measurement Required value measurement (current, power) Harmonic measurement Overvoltage protection Undervoltage protection Voltage imbalance protection Overfrequency protection Underfrequency protection Phase sequence protection Reverse power protection Required value protection

功能概述 Function overview

外形及安装尺寸图 Outline and mounting dimension diagram

- 固定式2000、2500壳架尺寸 Fixed type 2000, 2500 frame dimension

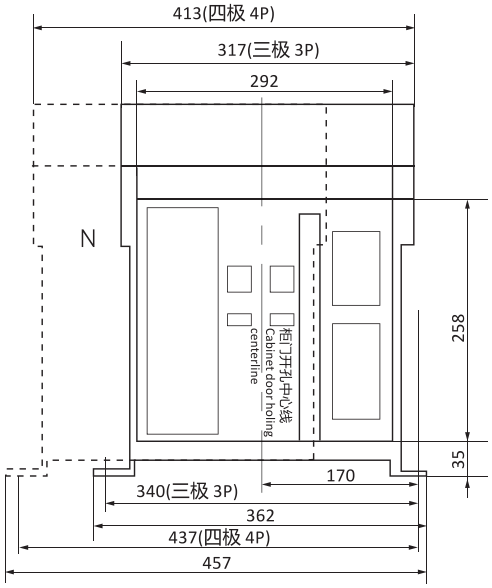

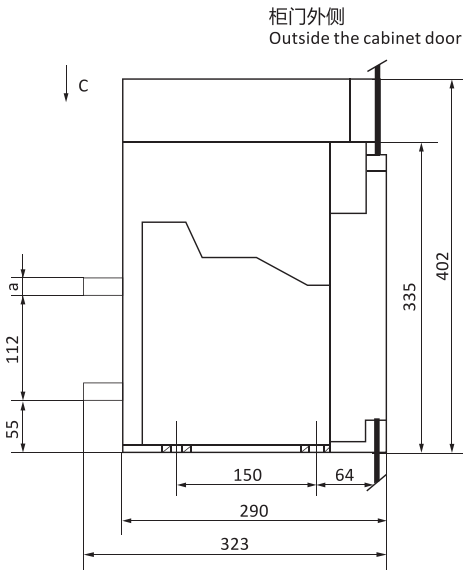

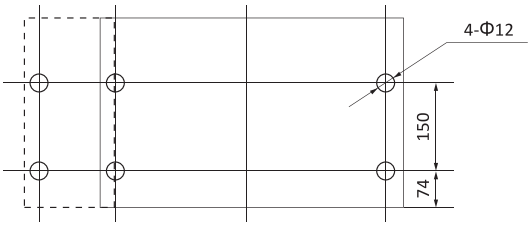

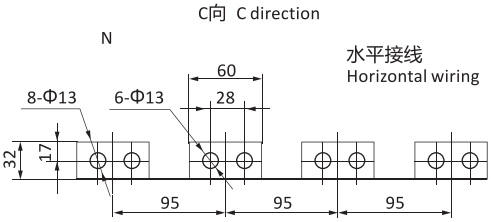

单位 Unit: mm

In(A)	a
630-800	10
1000-1600	15
2000-2500	20

功能概述 Function overview

外形及安装尺寸图 Outline and mounting dimension diagram

- 固定式3200壳架尺寸 Fixed type 3200 frame dimension

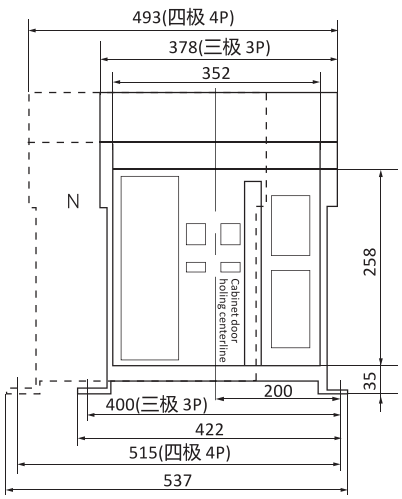

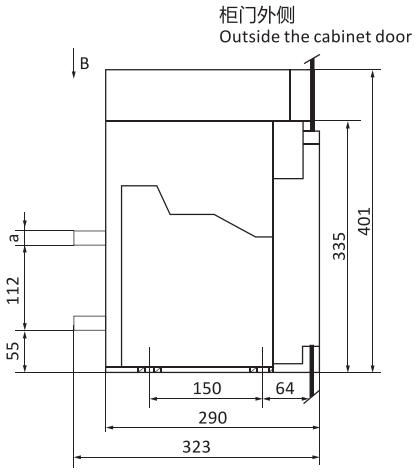

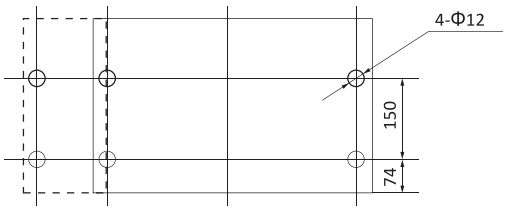

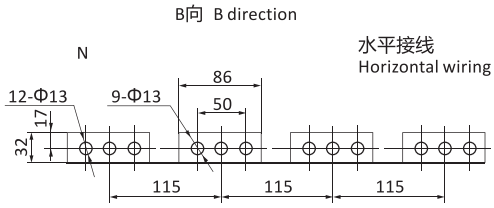

单位 Unit: mm

In(A)	a
2000,2500	20
2900,3200	30

功能概述 Function overview

外形及安装尺寸图 Outline and mounting dimension diagram

- 抽屉式2000、2500壳架尺寸 Draw-out type 2000, 2500 frame dimension

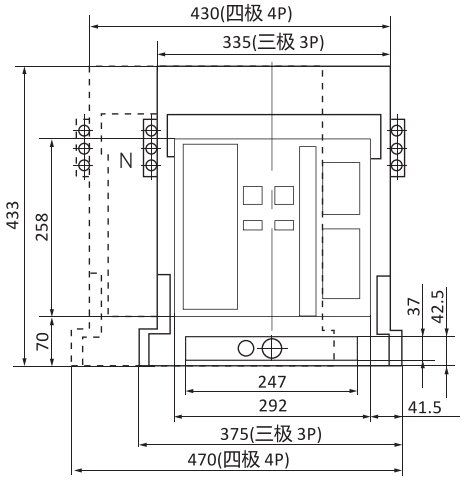

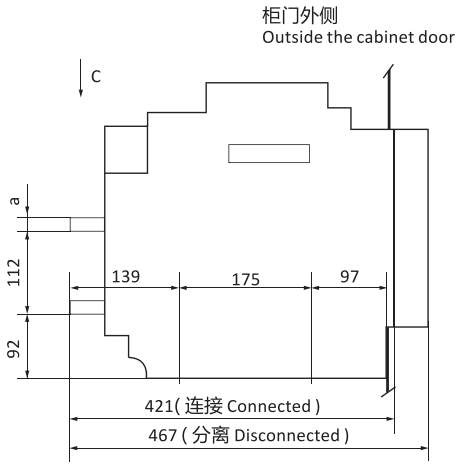

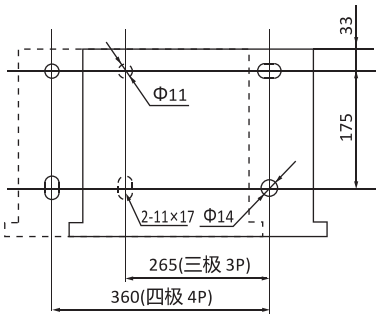

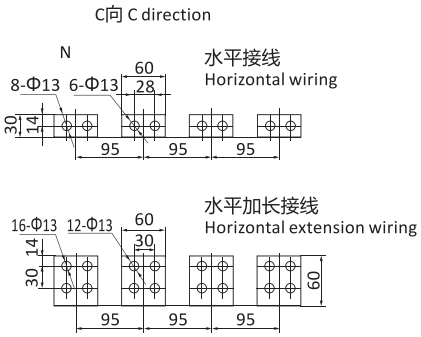

单位 Unit: mm

In(A)	a
630-800	10
1000-1600	15
2000-2500	20

功能概述 Function overview

外形及安装尺寸图 Outline and mounting dimension diagram

- 抽屉式3200壳架尺寸 Draw-out type 3200 frame dimension

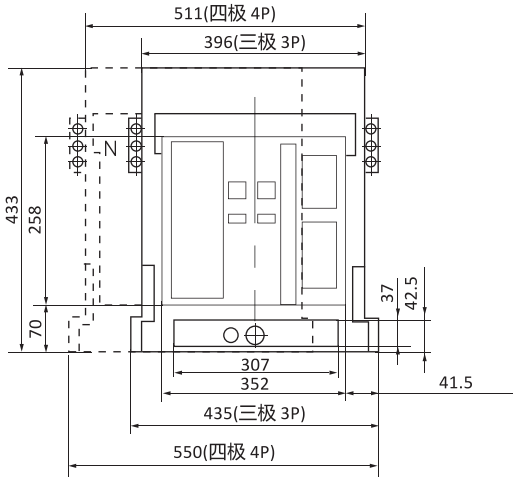

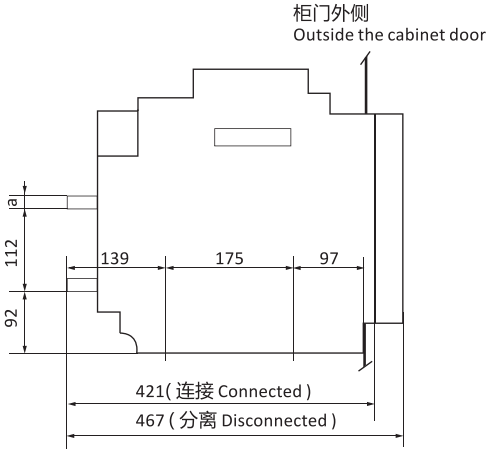

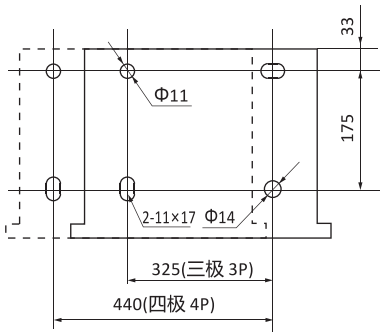

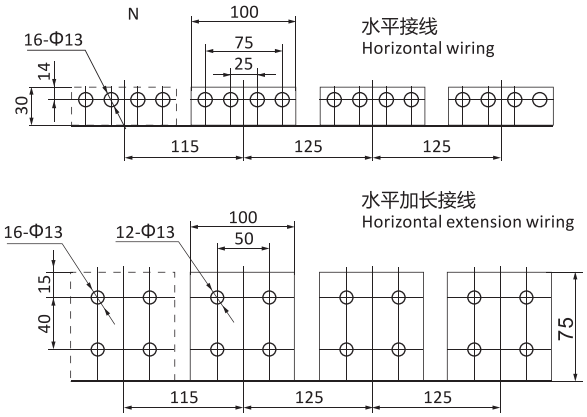

单位 Unit: mm

In(A)	a
2000,2500	20
2900,3200	30

功能概述 Function overview

外形及安装尺寸图 Outline and mounting dimension diagram

- 抽屉式4000/3P尺寸 Draw-out type 4000/3P dimension

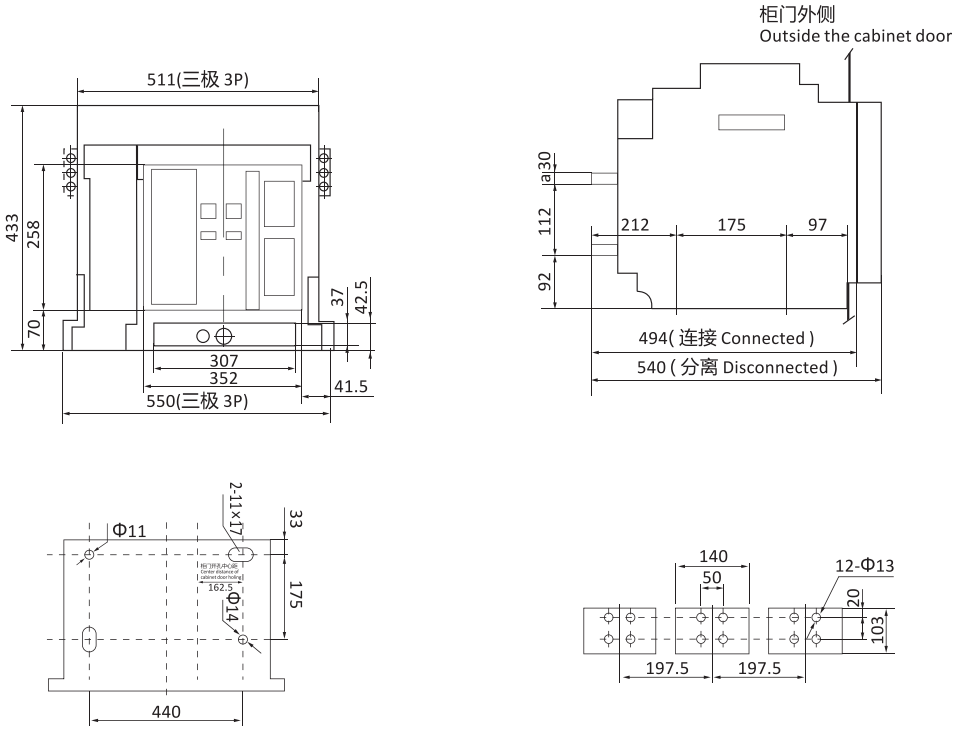

- 抽屉式4000/4P尺寸 Draw-out type 4000/4P dimension

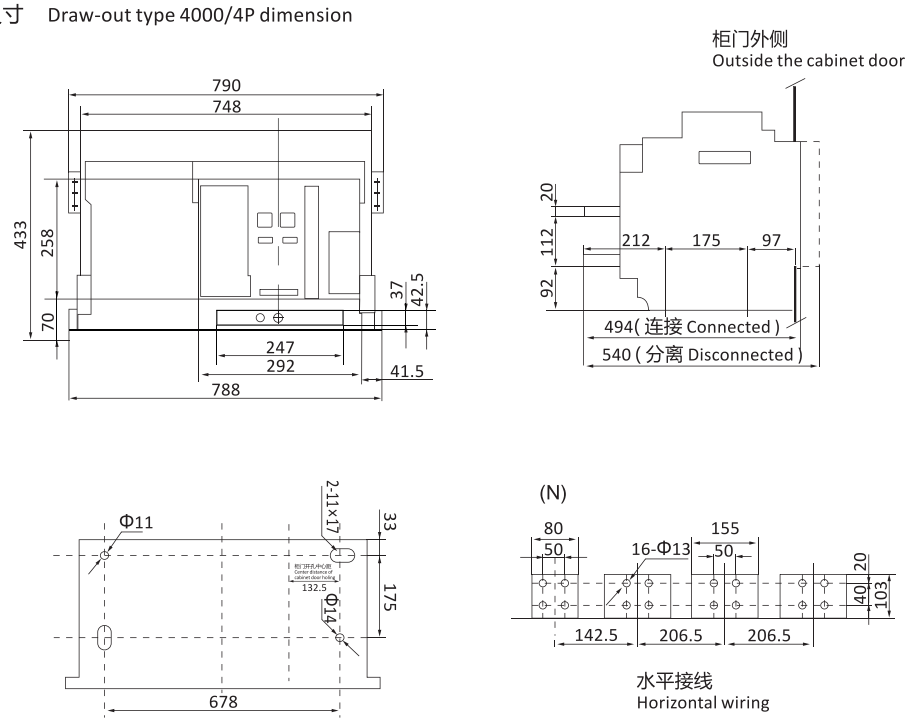

功能概述 Function overview

外形及安装尺寸图 Outline and mounting dimension diagram

- 抽屉式6300/4000A、5000A尺寸 Draw-out type 6300/4000A, 5000A dimension

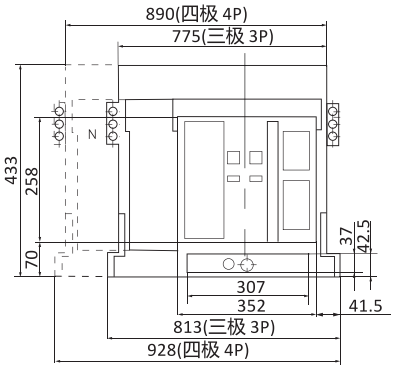

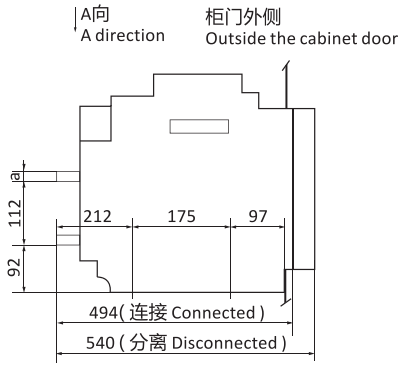

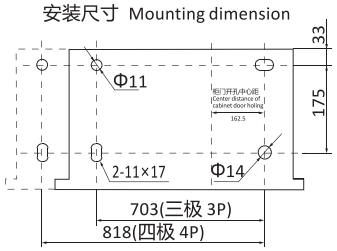

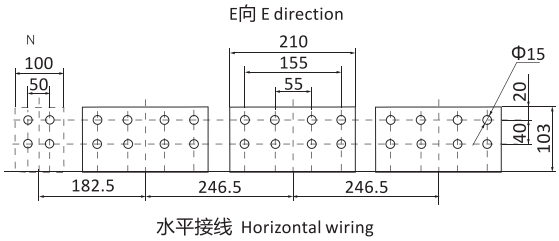

单位 Unit: mm

In(A)	a
4000	20
5000	30

- 抽屉式6300/3P 6300A尺寸 Draw-out type 6300/3P 6300A dimension

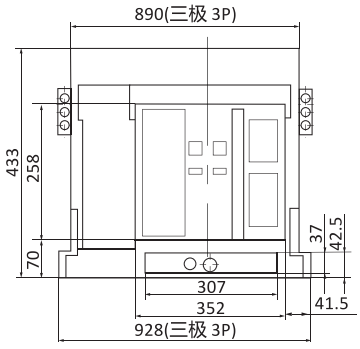

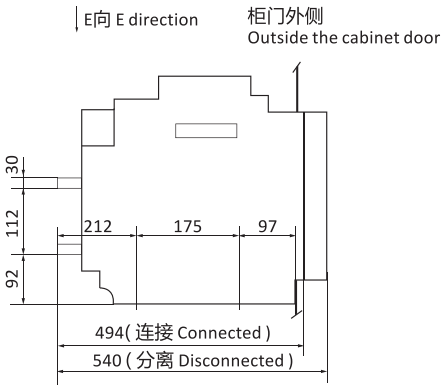

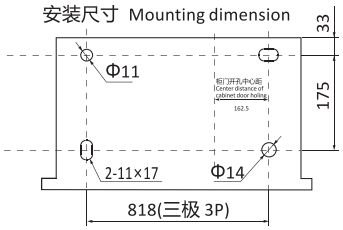

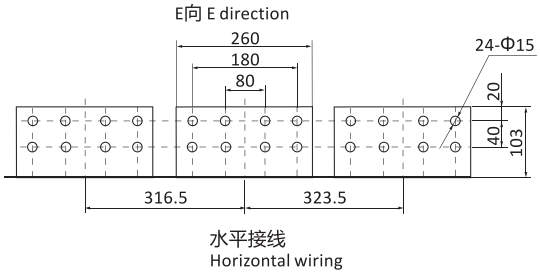

功能概述 Function overview

外形及安装尺寸图 Outline and mounting dimension diagram

- 面板开孔安装尺寸 Panel holing mounting dimension

单位 Unit：mm

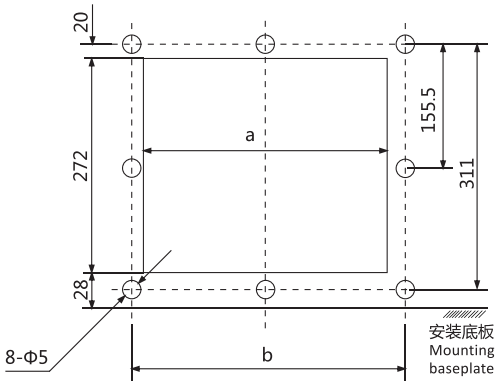

固定式 Fixed type

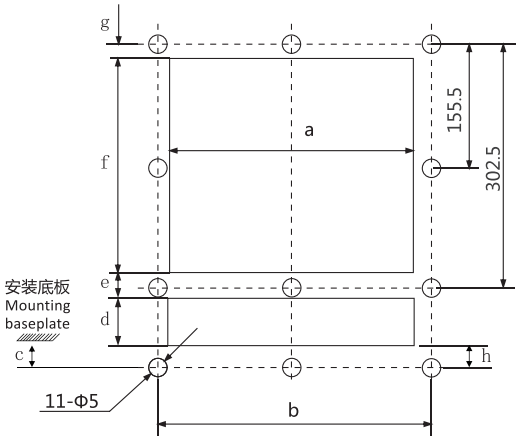

抽屉式 Draw-out type

单位 Unit：mm

壳架电流 Frame current	a	b	c	d	e	f	g	h
2000,2500	302	345	20.5	47	14.5	275	21	20.8
3200,4000/3P	366	405	19.5	48	20.5	271.5	20	18.8
4000/4P	302	345	20.5	47	14.5	275	21	20.8
6300	366	405	19.5	48	20.5	271.5	20	18.8

- 安全距离 Safety distance

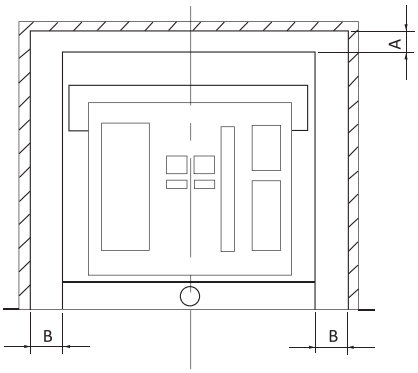

抽屉式断路器(3极/4极)
Draw-out type circuit breaker (3P/4P)

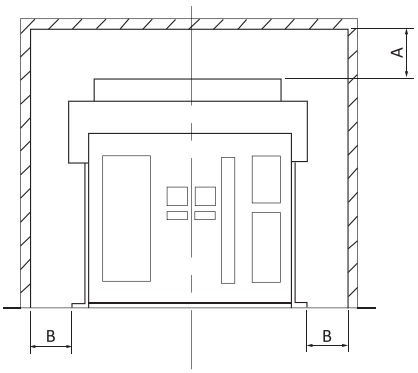

固定式断路器(3极/4极)
Fixed type circuit breaker (3P/4P)

断路器安装型式 Installation type of circuit breaker	至绝缘体 To the insulator		至金属体 To the metal body	
	A	B	A	B
抽屉式 Draw-out type	0	0	0	0
固定式 Fixed type	70	30	170	70

附件指示图
Accessory instruction diagram

SZRM1系列塑料外壳式断路器附件指示图　SZRM1 Series molded case circuit breaker accessory instruction diagram

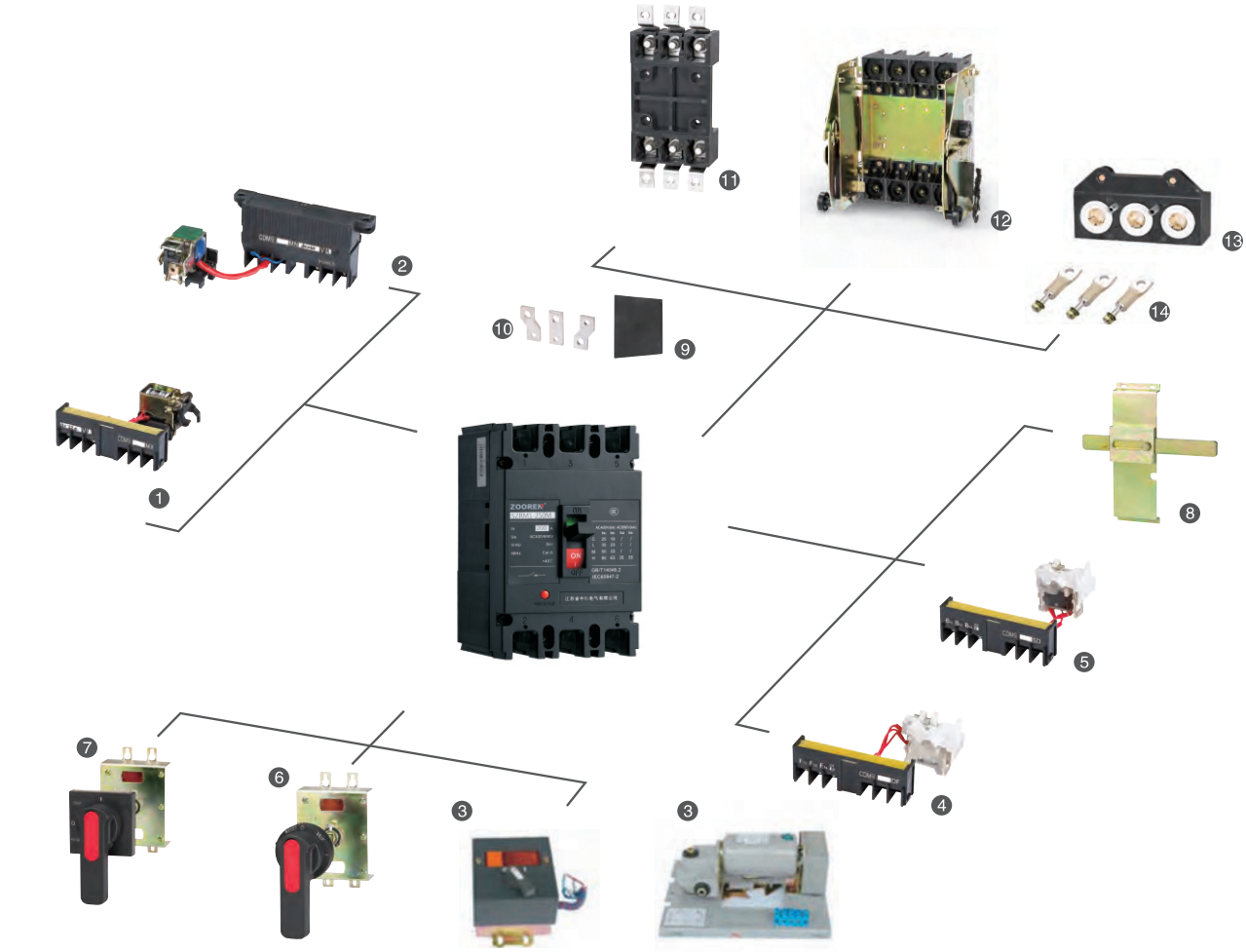

适用SZRM1-63,100,250型
Applicable to SZRM1-63, 100, 250 type

适用SZRM1-400,630,800,1250型
Applicable to SZRM1-400, 630, 800, 1250 type

远程操作 Remote operation	指示触点 Indicating contact	操作及防护 Operation and protection	安装方式 Installation method
1 分励脱扣器 Shunt release	4 辅助触头 Auxiliary contact	6 手动操作机构圆形手柄 Manual operating mechanism circular handle	10 扩展端子 Extension terminal
2 欠压脱扣器 Undervoltage release	5 报警触头 Alarm contact	7 手动操作机构方形手柄 Manual operating mechanism square handle	11 插入式板前 Plug-in front-panel
3 电动操作机构 Electric operating mechanism		8 机械联锁 Mechanical interlock	12 抽出式板后 Draw-out back-panel
		9 相间隔板 Interphase partition	13 插入式板后 Plug-in back-panel
			14 固定式板后 Fixed back-panel

注：1.SZRM1-63,100,250型无⑫附件
2.SZRM1-63,100,250,400,630,800仅3P配⑪附件
3.SZRM1-1250型无⑤⑥⑧附件，安装方式仅有固定式板前

Note: 1. SZRM1-63, 100, 250 type has no ⑫ accessory
2. Only 3P of SZRM1-63, 100, 250, 400, 630, 800 is equipped with ⑪ accessory
3. SZRM1-1250 type has no ⑤⑥⑧ accessories, and only fixed front-panel installation method is available

编码原则 Coding principle

SZRM1系列塑壳断路器 SZRM1 Series molded case circuit breaker

产品名称 Product name	壳架等级 Frame size	分断能力 Breaking capacity	极数 No. of poles	用途 Purpose	零线状态 Zero line status	额定电流A Rated current A
SZRM1	100	M	4300	2	B	100A
	63:63型 100:100型 250:250型 400:400型 630:630型 800:800型 1250:1250型 63:63 type 100:100 type 250:250 type 400:400 type 630:630 type 800:800 type 1250:1250 type	C:经济型 L:基本型 M:标准型 H:高分断型 C: Economic type L: Basic type M: Standard type H: High breaking type	3P:3300 4P:4300	缺省:配电保护 2:电动机保护 Default: Distribution protection 2: Motor protection	A:4极A型 B:4极B型 A: 4-pole A type B: 4-pole B type	16, 20, 25, 32, 40, 50, 63, 80, 100, 125, 140, 160, 180, 200, 225, 250, 315, 350, 400, 500, 630, 700, 800, 1000 1250
SZRM1	100	M	4P	2	B	100

订货代号即: SZRM1100M4P2B100
Order code: SZRM1100M4P2B100

技术参数 Technical parameter

极数：3、4
额定绝缘电压(V)Ui：63:800 100~1250:1000
额定冲击耐受电压(kV)Uimp：8
额定工作电压(V)Ue：400、690
适用于隔离：
选择性类别：A
环境：使用环境温度: -5℃至+50℃
可运行条件：周围空气温度可低至-25℃、高至+70℃(超过+40℃降容使用)
海拔高度：≤2000m
海拔至2500m特性不受影响(超过2500m降容使用)
符合GB/T14048.2/IEC60947-2的断路器特性
认证

No. of poles : 3,4
Rated insulation voltage (V) Ui : 63:800 100~1250:1000
Rated impulse withstand voltage (kV) Uimp : 8
Rated working voltage (V) Ue : 400,690
Suitable for isolation :
Selective category : A
Environment : Operating ambient temperature: -5℃ to +50℃
Operating condition: The ambient air temperature can be as low as -25℃ and as high as +70℃
(the capacity should be reduced for use beyond +40℃)
Altitude : ≤2000m
The characteristic is not affected from an altitude up to 2500m (the capacity should be reduced for use beyond 2500m)
It conforms to circuit breaker characteristic of GB/T14048.2/IEC60947-2
Certificate

壳架电流 Frame current		63		100				250				400				630				800	1250
额定电流In (A) Rated current In (A)		16,20 25,32 40,50 63		16,20,25, 32,40,50, 63,80,100				100,125,160, 180,200,225, 250				225,250 315,350 400				400,500 630				630 700 800	800 1000 1250
分断能力级别 Breaking capacity level		L	M	C	L	M	H	C	L	M	H	C	L	M	H	C	L	M	H	M	M
额定极限短路分断能力Icu(kA) Rated ultimate short-circuit breaking capacity Icu (kA)	400V	25	50	25	35	50	85	25	35	50	85	35	50	70	100	35	50	70	100	70	50
	690V	/	/	/	/	/	35	/	/	/	35	/	/	/	35	/	/	/	35	/	/
额定运行短路分断能力Ics(kA) Rated service short-circuit breaking capacity Ics (kA)	400V	18	35	18	25	35	65	18	25	35	65	25	35	50	75	25	35	50	75	50	35
	690V	/	/	/	/	/	35	/	/	/	35	/	/	/	35	/	/	/	35	/	/

使用寿命 Service life		63	100	250	400	630	800	1250
每小时操作次数 Number of operations per hour		120	120	120	60	20	20	20
电气寿命 Electrical life		10000	10000	10000	8000	8000	8000	8000
机械寿命 400V Mechanical life 400V	免维护 Maintenance-free	20000	20000	20000	10000	10000	10000	10000
	有维护 With maintenance	40000	40000	40000	20000	20000	20000	20000

注: SZRM1-1250仅3P
分断能力级别: 4P仅M型
Note: SZRM1-1250 only has 3P
Breaking capacity level: 4P, only M type

附件安装位置示意图　Accessory installation location diagram
脱扣器安装方式及附件代号　Release installation method and accessory code

附件代号 Accessory code	附件名称 Accessory name	产品型号 Product model				
复式 Compound		63/100/250	400	630	800	1250
308	报警触头 Alarm contact	◻	◻	◻	◻	
310	分励脱扣器 Shunt release	●	●	●	●	●
320	辅助触头(1NO+ 1NC) Auxiliary contact(1NO+ 1NC)	■				
322	辅助触头(2NO+2NC) Auxiliary contact(2NO+2NC)	■■	■■	■■	■■	■■
330	欠压脱扣器 Undervoltage release	○	○	○	○	○
340	辅助触头(1NO+1NC) Auxiliary contact (1NO+1NC) 分励脱扣器 Shunt release	● ■				
350	分励脱扣器 Shunt release 欠压脱扣器 Undervoltage release	● ○	● ○	● ○	● ○	● ○
360	辅助触头 (1NO+1NC) Auxiliary contact (1NO+1NC) + 辅助触头 (1NO+1NC) Auxiliary contact (1NO+1NC)	■ ■				
362	辅助触头 (2NO+2NC) Auxiliary contact (2NO+2NC) + 辅助触头 (2NO+2NC) Auxiliary contact (2NO+2NC)	■■ ■■	■■ ■■	■■ ■■	■■ ■■	
370	辅助触头(1NO+1NC) Auxiliary contact(INO+1NC) 欠压脱扣器 Undervoltage release	■ ○				
380	分励脱扣器辅助触头(2NO+2NC) Shunt release Auxiliary contact (2NO+2NC)	● ■■	● ■■	● ■■	● ■■	■■ ●
390	欠压脱扣器辅助触头(2NO+2NC) Undervoltage release Auxiliary contact (2NO+2NC)	■■ ○	■■ ○	■■ ○	■■ ○	■■ ○
318	分励脱扣器报警触头 Shunt release Alarm contact	◻ ●	◻ ●	◻ ●	◻ ●	
328	辅助报警触头 Auxiliary alarm contact	◻■	◻■	◻■	◻■	
338	欠压脱扣器报警触头 Undervoltage release Alarm contact	◻ ○	◻ ○	◻ ○	◻ ○	
348	分励脱扣器辅助报警触头 Shunt release Auxiliary alarm contact	◻■ ●	◻■ ●	◻■ ●	◻■ ●	
368	辅助触头(2NO+2NC) Auxiliary contact(2NO+2NC) 辅助报警触头 Auxiliary alarm contact	◻■ ■■	◻■ ■■	◻■ ■■	◻■ ■■	
369	辅助触头(1NO+1NC) Auxiliary contact(1NO+1NC) 辅助报警触头 Auxiliary alarm contact	◻■ ■				
378	欠压脱扣器辅助报警触头 Undervoltage release Auxiliary alarm contact	◻■ ○	◻■ ○	◻■ ○	◻■ ○	

功能概述 Function overview

外形及安装尺寸图 Outline and mounting dimension diagram

断路器板前及板后外形及安装尺寸见图和表格

The outline and mounting dimensions of the front and back panel of the circuit breaker are shown in Figure and Table

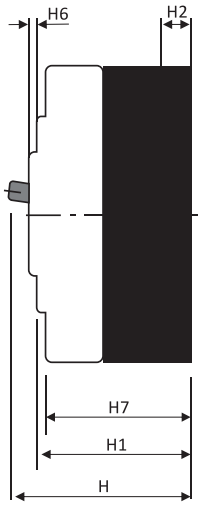

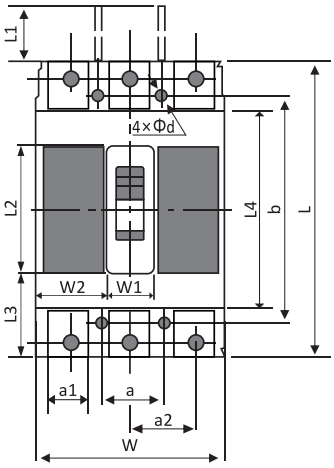

三极 3P

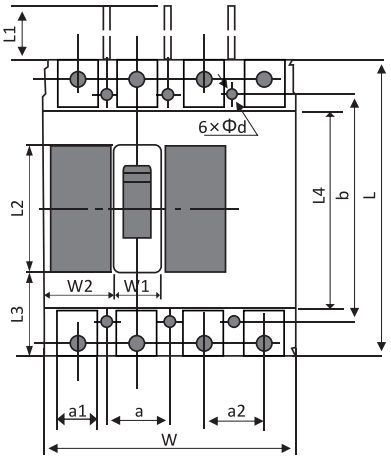

四极 4P

表1 断路器外形尺寸和安装尺寸

Table 1 Outline and mounting dimension of circuit breaker

单位 Unit: mm

型号 Model	极数 No. of poles	外形尺寸(mm) Outline dimension (mm)						安装尺寸(mm) Mounting dimension (mm)				板后接线尺寸(mm) Back-panel wiring dimension (mm)								开孔尺寸(mm) Holing dimension (mm)						
		L	L1	W	H	H1	H2	a /a2	a1	b	ϕd	a3	a4	b1	d1	d2	H3	H4	H5	L2	W1	H6	L3	W2	L4	H7
125C,L	3	130	47.5	75	81	60	24	25	17	111	4.5	50	75	115	20	M8	25	52	92	50	22	5	40	26.5	90	56
	4	155	51	120	107	85	24	30	18	132	4.5	60	90	137	25	M8	35	62	92	61	30	3	51.5	30	102	75
160C,L,M,H	3	155	51	90	107	85	24	30	18	132	4.5	60	90	137	25	M8	35	62	92	61	30	3	51.5	30	102	75
	4			120																						
250C,L	3	165	64	105	92	72.5	23.5	35	23.5	126	4.5	70	105	144	25	M10	35	55	100	56	30	3.5	57.5	37.5	97.8	62.5
250M,H					110	88.5	23.5																			78.5
250C,L	4			140	92	72.5	23.5																			62.5
250M,H					110	88.5	23.5																			78.5
400C,L,M,H	3	257	103	140	150	105.5	36.5	44	30.5	215	6.5	88	132	225	32	Φ12.5	20	40	75	120	58.5	3	71.5	40.8	171.5	97
	4			186																						
630C,L,M,H	3	257	103	140	150	105.5	38.5	44	30.5	215	6.5	88	132	225	32	Φ12.5	20	40	75	120	58.5	3	71.5	40.8	171.5	97
	4			186																						

附件指示图
Accessory instruction diagram

SZRM1E系列电子式塑壳断路器附件指示图 SZRM1E Series electronic molded case circuit breaker accessory instruction diagram

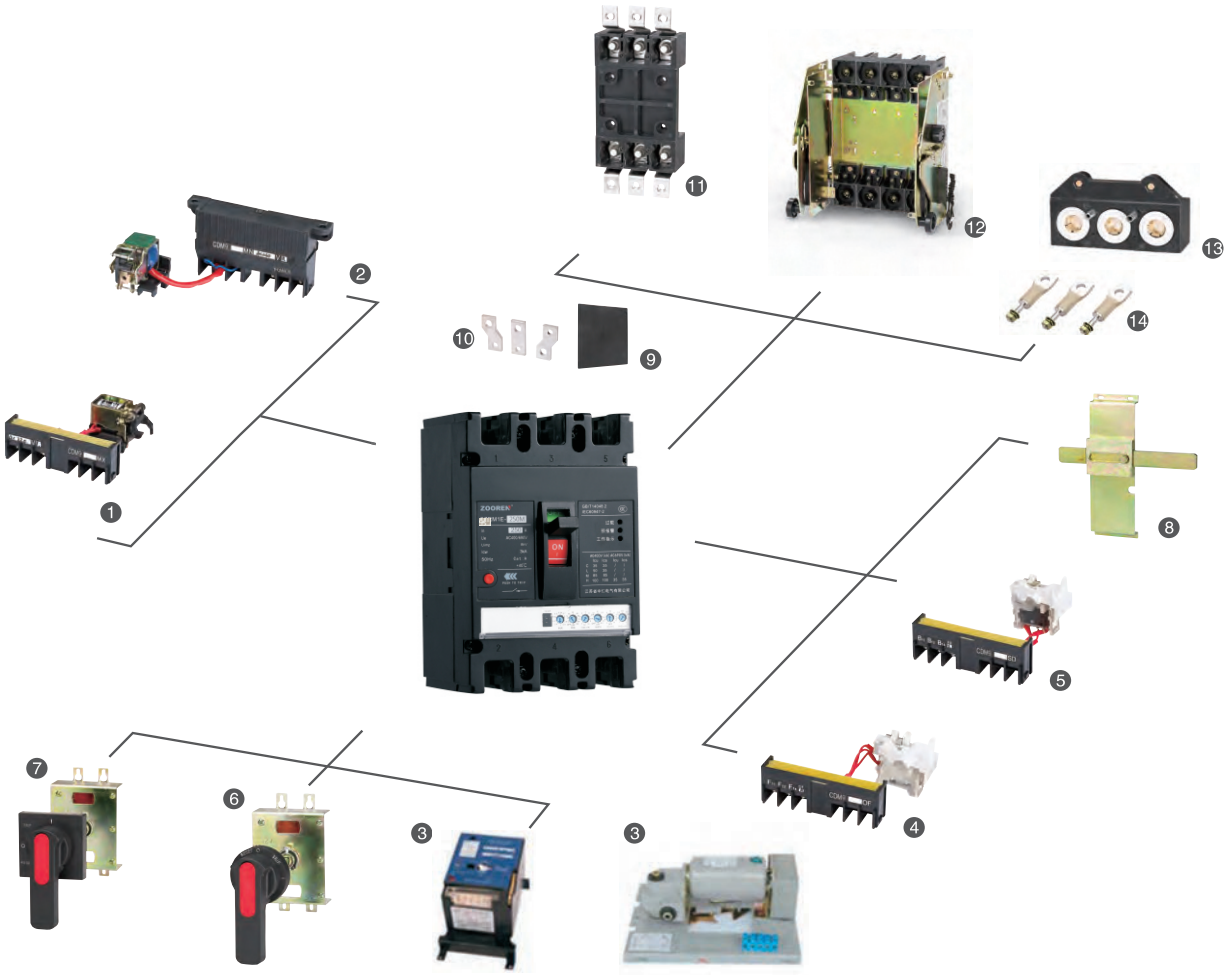

适用SZRM1E-125,250型
Applicable to SZRM1E-125, 250 type

适用SZRM1 E-400,800型
Applicable to SZRM1 E-400, 800 type

远程操作 Remote operation	指示触点 Indicating contact	操作及防护 Operation and protection	安装方式 Installation method
1 分励脱扣器 Shunt release	4 辅助触头 Auxiliary contact	6 手动操作机构圆形手柄 Manual operating mechanism circular handle	10 扩展端子 Extension terminal
2 欠压脱扣器 Undervoltage release	5 报警触头 Alarm contact	7 手动操作机构方形手柄 Manual operating mechanism square handle	11 插入式板前 Plug-in front-panel
3 电动操作机构 Electric operating mechanism		8 机械联锁 Mechanical interlock	12 抽出式板后 Draw-out back-panel
		9 相间隔板 Interphase partition	13 插入式板后 Plug-in back-panel
			14 固定式板后 Fixed back-panel

注：1.SZRM1E-125,250型无⑫附件。
2.SZRM1E-125,250,400,800仅3极配⑪附件。

Note: 1. SZRM1E-125, 250 type has no ⑫ accessory.
2. Only 3P of SZRM1E-125, 250, 400, 800 is equipped with ⑪ accessory.

编码原则 Coding principle

SZRM1E系列电子式塑壳断路器 SZRM1E Series electronic molded case circuit breaker

产品名称 Product name	壳架等级 Frame size	分断能力 Breaking capacity	极数 No. of poles	零线状态 Zero line status	额定电流A Rated current A	整定方式 Setting method
SZRM1E	125	M	4300	B	125A	/
	125:125型 250:250型 400:400型 800:800型 125:125 type 250:250 type 400:400 type 800:800 type	M:标准型 H:高分断型 M: Standard type H: High breaking type	3P:3300 4P:4300	A:4极A型 B:4极B型 A: 4-pole A type B: 4-pole B type	32,63,125, 250,400,630, 800	0.4 ~ 1 In
SZRM1E	125	M	4P	B	125	

订货代号即: SZRM1E125M4PB125
Order code: SZRM1E125M4PB125

技术参数 Technical parameter

共同特性 Common characteristic

极数：3、4
额定绝缘电压(V)Ui：1000
额定冲击耐受电压(kV)Uimp：8
额定工作电压(V)Ue：400、690
适用于隔离：
选择性类别：125、250型A类，400、800型B类
环境：使用环境温度: -5℃至+50℃
可运行条件：周围空气温度可低至-25℃、高至+70℃(超过+40℃降容使用)
海拔高度：≤2000m
海拔至2500m特性不受影响(超过2500m降容使用)
符合GB/T14048.2/IEC60947-2的断路器特性
认证

No. of poles : 3,4
Rated insulation voltage (V) Ui : 1000
Rated impulse withstand voltage (kV) Uimp : 8
Rated working voltage (V) Ue : 400,690
Suitable for isolation :
Selective category : Category A for 125, 250 type, category B for 400, 800 type
Environment : Operating ambient temperature: -5℃ to +50℃
Operating condition: The ambient air temperature can be as low as -25℃ and as high as +70℃
(the capacity should be reduced for use beyond +40℃)
Altitude : ≤2000m
The characteristic is not affected from an altitude up to 2500m (the capacity should be reduced for use beyond 2500m)
It conforms to circuit breaker characteristic of GB/T14048.2/IEC60947-2
Certificate

壳架电流 Frame current		125		250		400		800	
额定电流In (A) Rated current In (A)		32,63,125		250		400		630,800	
整定电流Ir (A) Setting current Ir (A)		(0·4~1)In		(0·4~1)In		(0·4~1)In		(0·4~1)In	
分断能力级别 Breaking capacity level		M	H	M	H	M	H	M	H
额定极限短路分断能力Icu(kA) Rated ultimate short-circuit breaking capacity Icu (kA)	400V	50	85	50	85	75	85	75	85
	690V	/	35	/	35	/	35	/	35
额定运行短路分断能力Ics(kA) Rated service short-circuit breaking capacity Ics (kA)	400V	35	85	35	85	75	85	75	85
	690V	/	35	/	35	/	35	/	35

使用寿命 Service life			125	250	400	800
每小时操作次数 Number of operations per hour			120	120	60	20
电气寿命 Electrical life			10000	10000	10000	8000
机械寿命 Mechanical life	400V	免维护 Maintenance-free	20000	20000	10000	10000
		有维护 With maintenance	40000	40000	20000	20000

注：分断能力级别: 4P仅M型　　Note: Breaking capacity level: 4P, only M type

附件安装位置示意图 Accessory installation location diagram
脱扣器安装方式及附件代号 Release installation method and accessory code

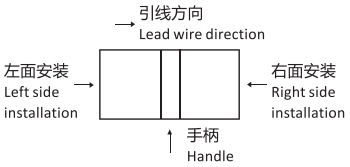

□ 报警触头 Alarm contact　■ 辅助触头 Auxiliary contact　● 分励脱扣器 Shunt release　○ 欠压脱扣器 Undervoltage release　△ 电子分励脱扣器 Electronic shunt release

附件代号 Accessory code	附件名称 Accessory name	产品型号 Product model		
复式 Compound		125/250	400	800
308	报警触头 Alarm contact	◄□ ►	◄□ ►	◄□ ►
310	分励脱扣器 Shunt release	◄ △►	◄ △►	◄ △►
320	辅助触头(1NO+ 1NC) Auxiliary contact(1NO+ 1NC)	◄■ ►		
322	辅助触头(2NO+2NC) Auxiliary contact(2NO+2NC)	◄■■ ►	◄■■ ►	◄■■ ►
330	欠压脱扣器 Undervoltage release	◄○ ►	◄○ ►	◄○ ►
340	辅助触头(1NO+1NC) Auxiliary contact (1NO+1NC) 分励脱扣器 Shunt release	◄■ △►		
350	分励脱扣器 Shunt release 欠压脱扣器 Undervoltage release	◄○ △►	◄○ △►	◄○ △►
352	分励脱扣器 Shunt release 欠压脱扣器 Undervoltage release			◄○ ●►
362	辅助触头 (2NO+2NC) Auxiliary contact (2NO+2NC) + 辅助触头 (2NO+2NC) Auxiliary contact (2NO+2NC)			◄■■ ■■►
380	分励脱扣器辅助触头(2NO+2NC) Shunt release Auxiliary contact (2NO+2NC)	◄■■ △►	◄■■ △►	◄■■ △►
382	分励脱扣器辅助触头(2NO+2NC) Shunt release Auxiliary contact (2NO+2NC)			◄● ■■►
390	欠压脱扣器辅助触头(2NO+2NC) Undervoltage release Auxiliary contact (2NO+2NC)			◄○ ■■►
318	分励脱扣器报警触头 Shunt release Alarm contact	◄□ △►	◄□ △►	◄□ △►
319	分励脱扣器报警触头 Shunt release Alarm contact			◄□ ●►
328	辅助报警触头 Auxiliary alarm contact	◄□■ ►	◄□■ ►	◄□■ ►
338	欠压脱扣器报警触头 Undervoltage release Alarm contact			◄○ □►
348	分励脱扣器辅助报警触头 Shunt release Auxiliary alarm contact	◄□■ △►	◄□■ △►	◄□■ △►
349	分励脱扣器辅助报警触头 Shunt release Auxiliary alarm contact			◄□■ ●►
368	辅助触头(2NO+2NC) Auxiliary contact (2NO+2NC) 辅助报警触头 Auxiliary alarm contact			◄□■ ■►
378	欠压脱扣器辅助报警触头 Undervoltage release Auxiliary alarm contact			◄□■ ○►

功能概述 Function overview

外形及安装尺寸图 Outline and mounting dimension diagram

断路器板前及板后外形及安装尺寸见图和表格

The outline and mounting dimensions of the front and back panel of the circuit breaker are shown in Figure and Table

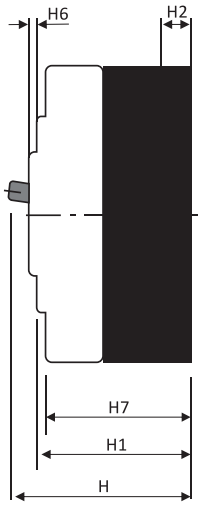

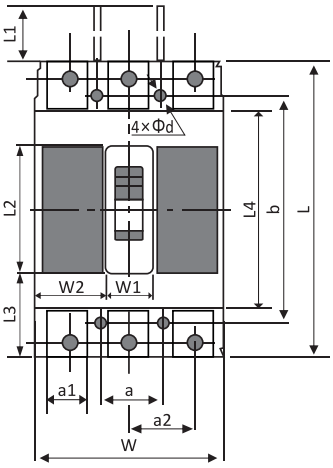

三极 3P

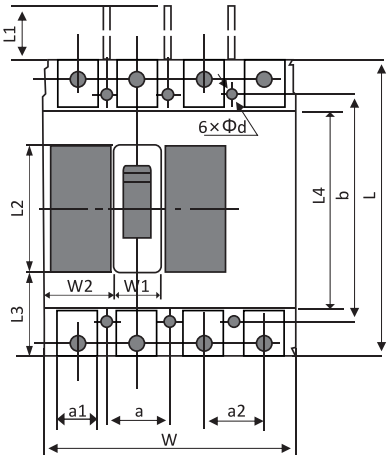

四极 4P

表1 断路器外形尺寸和安装尺寸

Table 1 Outline and mounting dimension of circuit breaker

单位 Unit: mm

型号 Model	极数 No. of poles	外形尺寸(mm) Outline dimension (mm)						安装尺寸(mm) Mounting dimension (mm)				板后接线尺寸(mm) Back-panel wiring dimension (mm)								开孔尺寸(mm) Holing dimension (mm)						
		L	L1	W	H	H1	H2	a /a2	a1	b	ϕd	a3	a4	b1	d1	d2	H3	H4	H5	L2	W1	H6	L3	W2	L4	H7
125C,L	3	130	47.5	75	81	60	24	25	17	111	4.5	50	75	115	20	M8	25	52	92	50	22	5	40	26.5	90	56
	4	155	51	120	107	85	24	30	18	132	4.5	60	90	137	25	M8	35	62	92	61	30	3	51.5	30	102	75
160C,L,M,H	3	155	51	90	107	85	24	30	18	132	4.5	60	90	137	25	M8	35	62	92	61	30	3	51.5	30	102	75
	4			120																						
250C,L	3	165	64	105	92	72.5	23.5	35	23.5	126	4.5	70	105	144	25	M10	35	55	100	56	30	3.5	57.5	37.5	97.8	62.5
250M,H					110	88.5	23.5																			78.5
250C,L	4			140	92	72.5	23.5																			62.5
250M,H					110	88.5	23.5																			78.5
400C,L,M,H	3	257	103	140	150	105.5	36.5	44	30.5	215	6.5	88	132	225	32	Φ12.5	20	40	75	120	58.5	3	71.5	40.8	171.5	97
	4			186																						
630C,L,M,H	3	257	103	140	150	105.5	38.5	44	30.5	215	6.5	88	132	225	32	Φ12.5	20	40	75	120	58.5	3	71.5	40.8	171.5	97
	4			186																						

附件指示图
Accessory instruction diagram

SZRM1L剩余电流动作断路器附件指示图　SZRM1L Residual current operated circuit breaker accessory instruction diagram

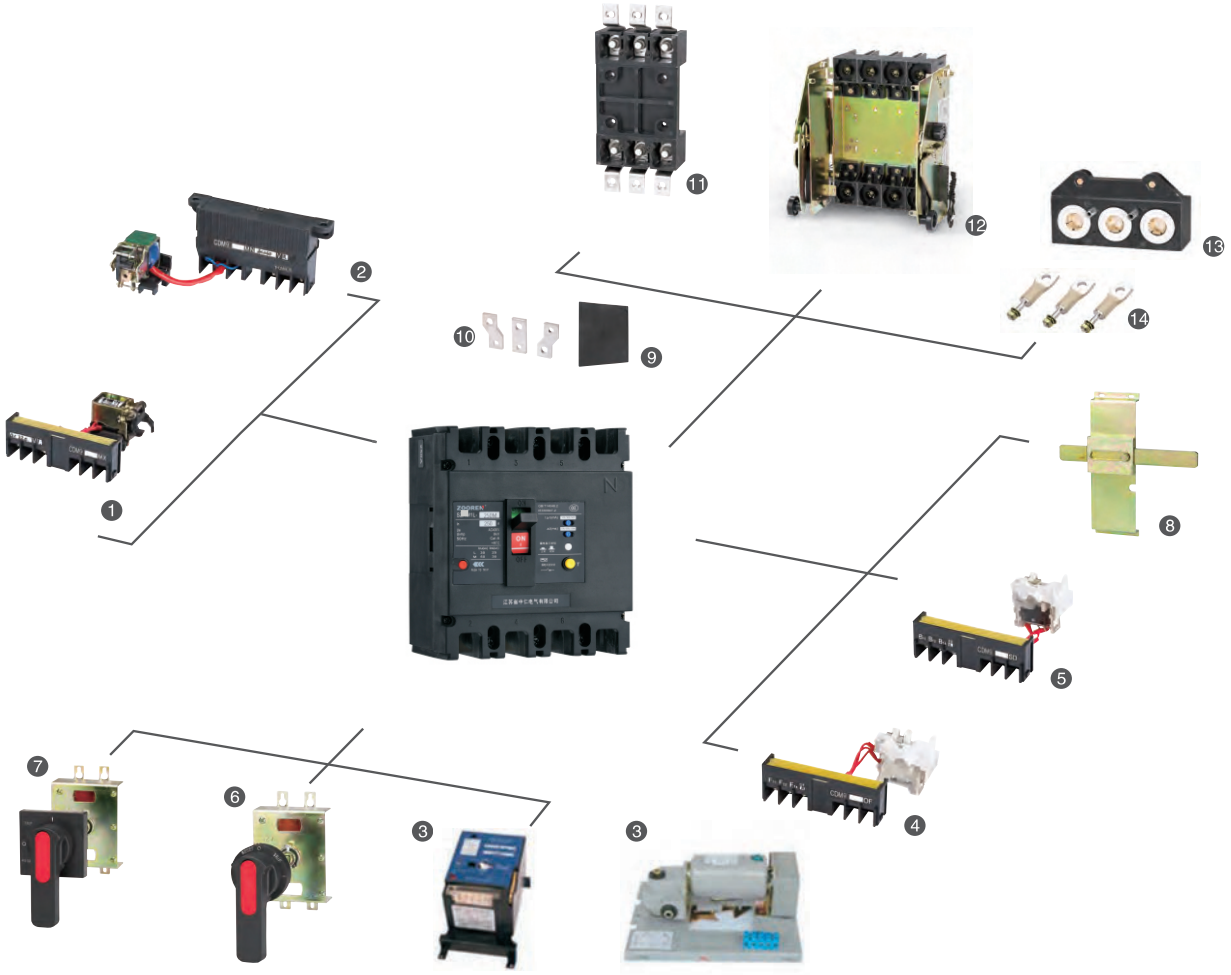

适用于SZRM1L-125,250型
Suitable for SZRM1L-125, 250 type

适用于SZRM1L-400,630,800型
Suitable for SZRM1L-400, 630, 800 type

远程操作 Remote operation	指示触点 Indicating contact	操作及防护 Operation and protection	安装方式 Installation method
1 分励脱扣器 Shunt release	4 辅助触头 Auxiliary contact	6 手动操作机构圆形手柄 Manual operating mechanism circular handle	10 扩展端子 Extension terminal
2 欠压脱扣器 Undervoltage release	5 报警触头 Alarm contact	7 手动操作机构方形手柄 Manual operating mechanism square handle	11 插入式板前 Plug-in front-panel
3 电动操作机构 Electric operating mechanism		8 机械联锁 Mechanical interlock	12 抽出式板后 Draw-out back-panel
		9 相间隔板 Interphase partition	13 插入式板后 Plug-in back-panel
			14 固定式板后 Fixed back-panel

注：1.SZRM1L-125,250型无⑫附件
2.SZRM1L-125,250,400,630,800仅3极配⑪附件

Note: 1. SZRM1L-125, 250 type has no ⑫ accessory.
2. Only 3P of SZRM1L-125, 250, 400, 630, 800 is equipped with ⑪ accessory.

编码原则 Coding principle

SZRM1L剩余电流动作断路器 SZRM1L Residual current operated circuit breaker

产品名称 Product name	SZRM1L		SZRM1L
壳架等级 Frame size	125	125:125型；250:250型；400:400型；800:800型 125:125 type , 250:250 type , 400:400 type , 800:800 type	125
分断能力 Breaking capacity	M	L:基本型；M:标准型 L: Basic type , M: Standard type	M
极数 No. of poles	4	3:3P 4:4P	4
脱扣方式 Release method	3	3: 过载+短路保护 2: 短路保护 3: Overload+short circuit protection 2: Short circuit protection	3
内部附件 Internal accessory	10	00:无附件 00: No accessory 附件及代号详见说明书 Please refer to the manual for accessory and code	10
用途 Purpose	2	缺省 : 配电保护 Default : Distribution protection 2: 电动机保护 2: Motor protection	2
零线状态 Zero line status	B	B: 4极B型 B: 4-pole B type	B
额定电流A Rated current A	100A	10,16,20,25,32,40,50,63,80,100,125,140,160,180, 200,225,250,315,350,400,500,630,700,800	100
附件电压 Accessory voltage	1A	1A:AC230V , 2A:AC400V 1D:DC110V , 2D:DC220V , 3D:DC24V	1A
安装方式 Installation method	R	缺省 : 固定式板前 R:固定式板后 P:插入式板后 Default: fixed front-panel R: Fixed back-panel P: Plug-in back-panel	R

订货代号即: SZRM1L125M43102B1001AR
Order code: SZRM1L125M43102B1001AR

技术参数 Technical parameter

共同特性 Common characteristic

极数：3、4
额定绝缘电压(V)Ui：1000
额定冲击耐受电压(kV)Uimp：8
额定工作电压(V)Ue：400
适用于隔离：
选择性类别：A
环境：使用环境温度: -5℃至+50℃
可运行条件：周围空气温度可低至-25℃、高至+70℃(超过+40℃降容使用)
海拔高度：≤2000m
海拔至2500m特性不受影响(超过2500m降容使用)
符合GB/T14048.2/IEC60947-2的断路器特性
认证

No. of poles : 3,4
Rated insulation voltage (V) Ui : 1000
Rated impulse withstand voltage (kV) Uimp : 8
Rated working voltage (V) Ue : 400
Suitable for isolation :
Selective category : A
Environment : Operating ambient temperature: -5℃ to +50℃
Operating condition: The ambient air temperature can be as low as -25℃ and as high as +70℃
(the capacity should be reduced for use beyond +40℃)
Altitude : ≤2000m
The characteristic is not affected from an altitude up to 2500m (the capacity should be reduced for use beyond 2500m)
It conforms to circuit breaker characteristic of GB/T14048.2/IEC60947-2
Certificate

壳架电流 Frame current	125		250		400		800	
额定电流In (A) Rated current In (A)	16,20,25,32 40,50,63,80 100,125		100,125,140 160,180,200 225,250		225,250,280 315,350,400		400,500,630 700,800	
分断能力级别 Breaking capacity level	L	M	L	M	L	M	L	M
额定极限短路Icu(kA) Rated ultimate short-circuit Icu (kA)	35	50	35	50	50	70	50	70
额定运行短路Ics(kA) Rated service short-circuit Ics (kA)	25	35	25	35	35	50	35	50
额定剩余动作电流I△n (mA) Rated residual operating current I △ n (mA)	100/300/500				300/500/1000			
2I△n极限不驱动时间 2I△n limit non-driving time	100/500/1000*,0/300/600							

使用寿命 Service life			125	250	400	800
每小时操作次数 Number of operations per hour			120	120	60	20
电气寿命 Electrical life			10000	10000	8000	8000
机械寿命 Mechanical life	400V	免维护 Maintenance-free	20000	20000	10000	10000
		有维护 With maintenance	40000	40000	20000	20000

注：1.“*”表示常规配置
2.分断能力级别：4P仅M型

Note: 1. “*” indicates regular configuration
2. Breaking capacity level: 4P, only M type

附件安装位置示意图 Accessory installation location diagram
脱扣器安装方式及附件代号 Release installation method and accessory code

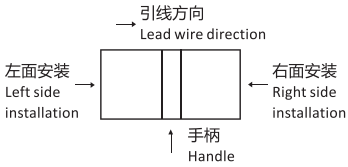

□ 报警触头 Alarm contact　■ 辅助触头 Auxiliary contact　● 分励脱扣器 Shunt release　○ 欠压脱扣器 Undervoltage release　△ 漏电报警脱扣 Leakage alarm trip　▲ 漏电报警不脱扣 Leakage alarm non-trip

附件代号 Accessory code	附件名称 Accessory name	产品型号 Product model		
复式 Compound		125/250	400	800
308	报警触头 Alarm contact	◄□►	◄□►	◄□►
310	分励脱扣器 Shunt release	◄●►	◄●►	◄●►
320	辅助触头(1NO+ 1NC) Auxiliary contact(1NO+ 1NC)	◄■►		
322	辅助触头(2NO+2NC) Auxiliary contact(2NO+2NC)	◄■■►	◄■■►	◄■■►
328	辅助报警触头 Auxiliary alarm contact	◄□■►	◄□■►	◄□■►
330	欠压脱扣器 Undervoltage release	◄○►	◄○►	◄○►
340 仅适用于4300B 4300C 340 Only applicable to 4300B, 4300C	辅助触头(1NO+1NC) 分励脱扣器 Auxiliary contact (1NO+1NC) Shunt release	◄●■►		
360 仅适用于4300B 4300C 360 Only applicable to 4300B , 4300C	辅助触头 (1NO+1NC) Auxiliary contact (1NO+1NC) + 辅助触头 (1NO+1NC) Auxiliary contact (1NO+ 1NC)	◄■■►		
362 仅适用于4300B 4300C 362 Only applicable to 4300B, 4300C	辅助触头 (2NO+2NC) Auxiliary contact (2NO+2NC) + 辅助触头 (2NO+2NC) Auxiliary contact (2NO+ 2NC)	◄■■■■►	◄■■■■►	◄■■■■►
368 仅适用于4300B 368 Only applicable to 4300B	辅助触头(2NO+2NC) 辅助报警触头 Auxiliary contact (2NO+2NC) Auxiliary alarm contact	◄□■■■►	◄□■■■►	◄□■■■►
369 仅适用于4300B 369 Only applicable to 4300B	辅助触头(1NO+1NC) 辅助报警触头 Auxiliary contact (1NO+1NC) Auxiliary alarm contact	◄□■►		
370 仅适用于4300B 370 Only applicable to 4300B	辅助触头(1NO+1NC) 欠压脱扣器 Auxiliary contact (1NO+1NC) Undervoltage release	◄○■►		
380 仅适用于4300B 380 Only applicable to 4300B	分励脱扣器 辅助触头(2NO+2NC) Shunt release Auxiliary contact (2NO+2NC)	◄●■■►	◄●■■►	◄●■■►
390 仅适用于4300B 390 Only applicable to 4300B	欠压脱扣器 辅助触头(2NO+2NC) Undervoltage release Auxiliary contact (2NO+2NC)	◄○■■►	◄○■■►	◄○■■►
I	漏电报警脱扣 Leakage alarm trip	◄△►	◄△►	◄△►
II	漏电报警不脱扣 Leakage alarm non-trip	◄▲►	◄▲►	◄▲►

注: 1. I、II附件右装，右侧不可装其它附件，左侧可装附件为: 308、310、320、 322、 328 、330。
2. 125L/250L型不可装I，II 附件。

Note: 1. Accessories I and II can be installed on the right side, and no other accessories can be installed on the right side.
The accessories that can be installed on the left side are: 308, 310, 320, 322, 328 and 330.
2.125L/250L type cannot be equipped with accessories I and II .

功能概述 Function overview

外形及安装尺寸图 Outline and mounting dimension diagram

断路器板前及板后外形及安装尺寸见图和表格

The outline and mounting dimensions of the front and back panel of the circuit breaker are shown in Figure and Table

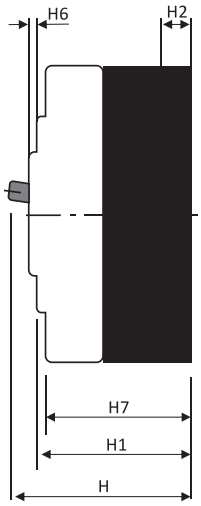

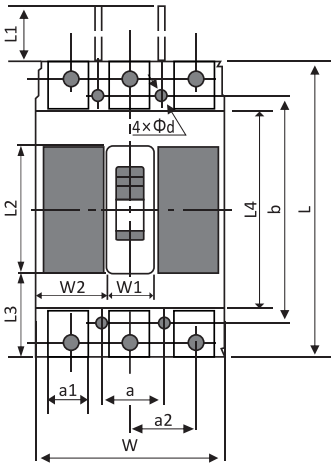

三极 3P

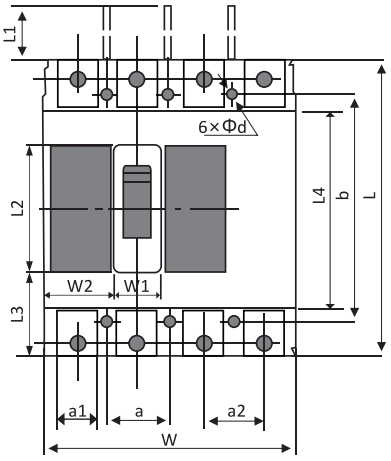

四极 4P

表1 断路器外形尺寸和安装尺寸

Table 1 Outline and mounting dimension of circuit breaker

单位 Unit: mm

型号 Model	极数 No. of poles	外形尺寸(mm) Outline dimension (mm)						安装尺寸(mm) Mounting dimension (mm)				板后接线尺寸(mm) Back-panel wiring dimension (mm)								开孔尺寸(mm) Holing dimension (mm)						
		L	L1	W	H	H1	H2	a /a2	a1	b	ϕd	a3	a4	b1	d1	d2	H3	H4	H5	L2	W1	H6	L3	W2	L4	H7
125C,L	3	130	47.5	75	81	60	24	25	17	111	4.5	50	75	115	20	M8	25	52	92	50	22	5	40	26.5	90	56
	4	155	51	120	107	85	24	30	18	132	4.5	60	90	137	25	M8	35	62	92	61	30	3	51.5	30	102	75
160C,L,M,H	3	155	51	90	107	85	24	30	18	132	4.5	60	90	137	25	M8	35	62	92	61	30	3	51.5	30	102	75
	4			120																						
250C,L	3	165	64	105	92	72.5	23.5	35	23.5	126	4.5	70	105	144	25	M10	35	55	100	56	30	3.5	57.5	37.5	97.8	62.5
250M,H					110	88.5	23.5																			78.5
250C,L	4			140	92	72.5	23.5																			62.5
250M,H					110	88.5	23.5																			78.5
400C,L,M,H	3	257	103	140	150	105.5	36.5	44	30.5	215	6.5	88	132	225	32	Φ12.5	20	40	75	120	58.5	3	71.5	40.8	171.5	97
	4			186																						
630C,L,M,H	3	257	103	140	150	105.5	38.5	44	30.5	215	6.5	88	132	225	32	Φ12.5	20	40	75	120	58.5	3	71.5	40.8	171.5	97
	4			186																						

编码原则 Coding principle

SZRQ1系列自动转换开关电器 SZRQ1 Series automatic transfer switching equipment

产品名称 Product name	壳架等级 Frame size	极数 No. of poles	额定电流A Rated current A	控制器型号 Controller model
SZRQ1	63N	3P	63A	B型控制器 B type controller
	63N:小型断路器型 63N: Miniature circuit breaker type	3P 4P	6,10,16,20 25,32,40 50,63	A: A 型控制器 B: B 型控制器 C: C 型控制器 D: D 型控制器 A: A type controller B: B type controller C: C type controller D: D type controller
SZRQ1	63N	3P	63	B

订货代号即: SZRQ163N3P63B
Order code: SZRQ163N3P63B

技术参数 Technical parameter

极数：3、4
额定绝缘电压(V)Ui：400
额定冲击耐受电压(kV)Uimp：4
额定工作电压(V)Ue：400
使用类别 ：AC-33iB
电器级别 ：CB
环境：使用环境温度: -5℃至 +40℃
海拔高度 ：≤2000m
符合GB/T14048.11/IEC 60947-6-1的标准
认证

No. of poles : 3,4
Rated insulation voltage (V) Ui : 400
Rated impulse withstand voltage (kV) Uimp : 4
Rated working voltage (V) Ue : 400
Utilization category : AC-33iB
Electrical grade : CB
Environment : Operating ambient temperature: -5℃ to +40℃
Altitude : ≤2000m
It conforms to GB/T14048.11/IEC 60947-6-1 standard
Certificate

壳架等级 Frame size	63
整定电流(A) Setting current (A)	6,10,16,20,25,32,40,50,63
分断能力 Breaking capacity	6KA
额定短路接通能力 Rated short-circuit making capacity	5*1.53KA(峰值) 5*1.53KA (peak)
额定短路分断能力 Rated short-circuit breaking capacity	5KA
机械寿命 Mechanical life	6000次 6000 times
电气寿命 Electrical life	1500次 1500 times

型号 Model	SZRQ1-63N			
控制器类型 Controller type	A	B	C	D
工作电源 Working power supply	AC150-265V,50/60Hz	AC150-265V,50/60Hz	AC150-265V,50/60Hz	AC150-265V,50/60Hz
安装方式 Installation method	一体式 Integrated	一体式 Integrated	一体式 Integrated	一体式 Integrated
工作位置 Work position	自动两个 2 automatic / 手动三个 3 manual	三个工作位置 3 work positions	自动两个 2 automatic / 手动三个 3 manual	三个工作位置 3 work positions
操作方式 Operation method	自动和手动 Automatic and manual	自动和手动 Automatic and manual	自动和手动 Automatic and manual	自动和手动 Automatic and manual
发动机控制 Engine control	无 None	一组5A继电器干接点 A set of 5A relay dry contacts	无 None	一组5A继电器干接点 A set of 5A relay dry contacts
消防联动控制 Fire linkage control	无 None	无源触点输入，带一组常开无源信号反馈触点 Passive contact input, with a set of normally open passive signal feedback contacts	无 None	无源触点输入，带一组常开无源信号反馈触点 Passive contact input, with a set of normally open passive signal feedback contacts
转换方式 Conversion method	自投自复 Self-throw self-reset	可提供自投自复、自动不自复和电网-发电机模式 It can provide self-throw self-reset, self-throw non self-reset and grid- generator mode	自投自复 Self-throw self-reset	可提供自投自复、自动不自复和电网-发电机模式 It can provide self-throw self-reset, self-throw non self-reset and grid- generator mode
转换延时功能 Conversion delay function	1.0±10%	0-30秒连续可调节 0-30s continuously adjustable	1.0±10%	0-30秒连续可调节 0-30s continuously adjustable
返回延时功能 Return delay function	1.4±10%	0-30秒连续可调节 0-30s continuously adjustable	1.4±10%	0-30秒连续可调节 0-30s continuously adjustable
监测电路 Monitoring circuit	A、N相检测 A, N phase detection	A、N相检测 A, N phase detection	A、B、C、N相检测 A, B, C, N phase detection	A、B、C、N相检测 A, B, C, N phase detection
欠电压检测 Undervoltage detection	有 Available	有 Available	有 Available	有 Available

注: SZRQ1-63N仅有一体式 Note: SZRQ1-63N only has integrated type

编码原则 Coding principle

SZRQ1系列自动转换开关电器 SZRQ1 Series automatic transfer switching equipment

产品名称 Product name	壳架等级 Frame size	分断能力 Breaking capacity	极数 No. of poles	额定电流A Rated current A	控制器型号 Controller model	安装方式 Installation method
SZRQ1	100	M	3P	100A	B型控制器 B type controller	分体式 Split type
	100:塑壳断路器型 250:塑壳断路器型 400:塑壳断路器型 630:塑壳断路器型 100: Molded case circuit breaker type 250: Molded case circuit breaker type 400: Molded case circuit breaker type 630: Molded case circuit breaker type	M:标准型 H:高分断型 M: Standard type H: High breaking type	3P 4P	16,20,25,32 40,50,63,80 100,125,140 160,180,200 225,250,315 350,400,500 630	A:A型控制器 B:B型控制器 A: A type controller B: B type controller	缺省: 一体式 F:分体式 Default: Integrated type F: Split type
SZRQ1	100	M	3P	100	B	F

订货代号即: SZRQ1100M3P100BF
Order code: SZRQ1100M3P100BF

技术参数 Technical parameter

极数：3、4
额定绝缘电压(V)Ui：1000
额定冲击耐受电压(kV)Uimp：6
额定工作电压(V)Ue：400
使用类别 ：AC-33iB
电器级别 ：CB
环境：使用环境温度: -5℃至 +40℃
海拔高度 ：≤2000m
符合GB/T14048.11/IEC 60947-6-1的标准
认证

No. of poles : 3,4
Rated insulation voltage (V) Ui : 1000
Rated impulse withstand voltage (kV) Uimp : 6
Rated working voltage (V) Ue : 400
Utilization category : AC-33iB
Electrical grade : CB
Environment : Operating ambient temperature: -5℃ to +40℃
Altitude : ≤2000m
It conforms to GB/T14048.11/IEC 60947-6-1 standard
Certificate

型号 Model	SZRQ1-100	SZRQ1-250	SZRQ1-400	SZRQ1-630
额定电流 Rated current	16,20,25,32,40,50, 63,80,100	100,125,140,160 180,200,225,250	225,250,315 350,400	400,500,630
控制器型号 Controller model	A型 A type	B型 B type		
控制电源 Control power supply	AC150~260V	AC150~300V 50/60Hz		
辅助工作电源电压 Auxiliary working supply voltage	/	DC15~30V		
电压测量范围 Voltage measurement range	/	40~300V		
欠电压转换值 Undervoltage conversion value	/	160~ 200V可调 160~200V adjustable		
过电压转换值 Overvoltage conversion value	/	240~ 290V可调 240~290V adjustable		
功耗 Power loss	≤20W	≤10W		
安装方式 Installation method	一体式 Integrated type	一体式(可将显示面板卸下后分体式安装) Integrated type(it can be installed separately after removing the display panel)		
工作位置 Work position	两个工作位置 2 working positions	三个工作位置 3 work positions		
操作方式 Operation method	自动和手动 Automatic and manual	自动、手动和手动操控操作 Automatic, manual and manual control operation		
电压监测功能 Voltage monitoring function	/	过压，欠压，缺相 Overvoltage, undervoltage, phase loss		
发电机控制 Generator control	/	一组10A继电器干接点 A set of 10A relay dry contacts		
消防联动控制 Fire linkage control	/	无源触点输入，带一组常开无源信号反馈触点 Passive contact input, with a set of normally open passive signal feedback contacts		
转换方式 Conversion method	自投自复 Self-throw self-reset	可设置自投自复、自投不自复、电网-发电机模式 It can be set to self-throw self-reset, self-throw non self-reset and grid-generator mode		
显示方式 Display mode	指示灯显示状态 Indicator light display status	中/英文数码管显示 Chinese/English digital display		
电压显示功能 Voltage indication function	/	有 Available		
远程通信功能 Remote communication function	/	/		
转换延时功能 Conversion delay function	固定2.6s Fixed 2.6s	0~ 180秒连续可调节 0~180s continuously adjustable		
返回延时功能 Return delay function	固定2.6s Fixed 2.6s	0~ 180秒连续可调节 0~180s continuously adjustable		

功能概述 Function overview

外形及安装尺寸图 Outline and mounting dimension diagram

- SZRQ1-63N系列产品外形图 Outline drawing of SZRQ1-63N series product

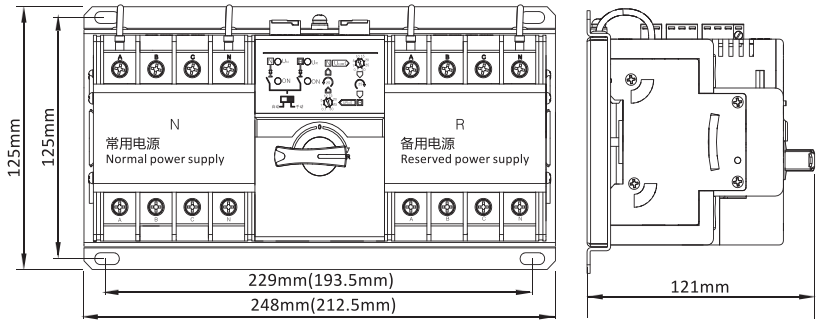

注：图中括号内的尺寸为二极和三极开关尺寸
Note: The dimensions in parentheses in the figure are for two-pole and three-pole switches

- SZRQ1系列产品外形图 Outline drawing of SZRQ1 series product

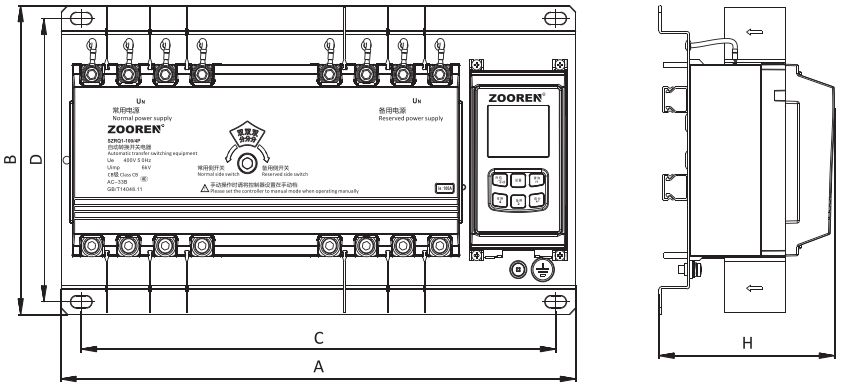

- 产品尺寸表 Product dimension table

尺寸 Dimension / 规格 Specification	A		B	C		D	H
	3P	4P		3P	4P		
SZRQ1-63	355	380	240	320	348	220	120
SZRQ1-100	390	420	240	358	388	220	120
SZRQ1-225	435	470	240	400	438	220	120
SZRQ1-400	565	615	330	505	555	300	174
SZRQ1-630	680	740	330	620	680	300	174

- B控制器面板外形图 B controller panel outline drawing

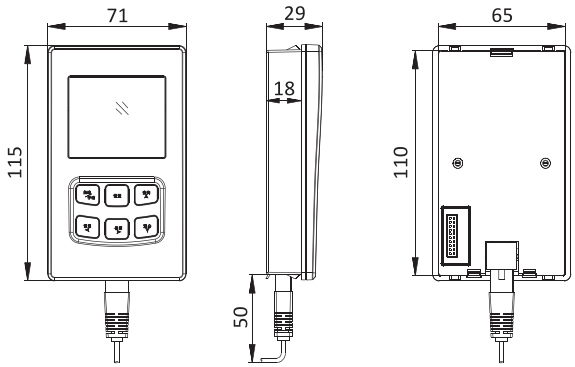

开孔尺寸 Holing dimension

编码原则 Coding principle

SZRQ2系列自动转换开关电器 SZRQ2 Series automatic transfer switching equipment

产品名称 Product name	壳架等级 Frame size	极数 No. of poles	额定电流A Rated current A	控制器类型 Controller type	开关位置 Switch position
SZRQ2	100	3P	100A	B型控制器 B type controller	III
	100:100型 160:160型 250:250型 630:630型 1600:1600型 100:100 type 160:160 type 250:250 type 630:630 type 1600:1600 type	3P 4P	16,20,25,32,40,50 63,80,100,125,140 160,180,200,225 250,315,400,500 630,800,1000 1250,1600	缺省:一体式 A:A型控制器(分体式) B:B型控制器(分体式) Default: Integrated type A: A type controller (split type) B: B type controller (split type)	II:二段式 II: Two-section type III:三段式 III: Three-section type
SZRQ2	100	3P	100	B	III

订货代号即: SZRQ2 1003P100B III
Order code: SZRQ2 1003P100A III

技术参数 Technical parameter

极数：3、4
额定工作电压(V)Ue：400
使用类别 ：AC-33iB
电器级别 ：PC
环境：使用环境温度: -5℃至 +40℃
海拔高度 ：≤2000m
符合GB/T14048.11/IEC 60947-6-1的标准
认证

No. of poles : 3,4
Rated working voltage (V) Ue : 400
Utilization category : AC-33iB
Electrical grade : PC
Environment : Operating ambient temperature: -5℃ to +40℃
Altitude : ≤2000m
It conforms to GB/T14048.11/IEC 60947-6-1 standard
Certificate

壳架电流 Frame current		100	160	250	630	1600
额定绝缘电压Ui V Rated insulation voltage Ui V		AC1000V				
额定工作电压Ui V Rated working voltage Ui V		AC400V				
额定冲击耐受电压Uimp kV Rated impulse withstand voltage Uimp kV		8			12	
额定工作电流In A Rated working current In A		16-100	125-160	180-250	315-630	800-1600
额定短时耐受电流Icw kA Rated short-time withstand current Icw kA		8	10	10	12.6	50
寿命 Life	机械寿命 Mechanical life	25000	20000	20000	15000	10000
	电气寿命 Electrical life	8000	6000	6000	6000	6000
辅助开关配置 Auxiliary switch configuration		In≤630A : I、II电源侧均为2常开2常闭辅助触头； In>630A : I、II电源侧均为1常开1常闭辅助触头。 In≤630A: Both the I and II power supply sides have 2NO and 2NC auxiliary contacts; In>630A: Both the I and II power supply sides have 1NO and 1NC auxiliary contact.				

分体控制器功能 Split controller function

A型普通控制器 A type ordinary controller	B型液晶控制器 B type LCD controller
对两路电源的过压、欠压、缺相等故障的检测功能。 发电机组启动信号(主电源有故障时延时约3s发出)。 消防双分接口(无源输入点)。 手动/自动转换延时可调。 控制器与开关之间用一条专用电缆连接，使其安装极为方便。 The detection function for overvoltage, undervoltage and phase loss faults of two power supplies. Generator set start signal (delayed for about 3s when there is a fault in the main power supply). Fire double break interface (passive input contact). The manual/automatic conversion delay is adjustable. A dedicated cable is used to connect the controller and switch, making installation extremely convenient.	对两路电源的过压、欠压、缺相等故障的检测功能。 发电机组启动信号(主电源有故障时延时约3s发出)。 消防双分接口(无源输入点)。 手动/自动转换延时可调。 液晶显示屏转换延时可调。 控制器与开关之间用一条专用电缆连接，使其安装极为方便。 The detection function for overvoltage, undervoltage and phase loss faults of two power supplies. Generator set start signal (delayed for about 3s when there is a fault in the main power supply). Fire double break interface (passive input contact). The manual/automatic conversion delay is adjustable. The conversion delay of the LCD screen is adjustable. A dedicated cable is used to connect the controller and switch, making installation extremely convenient.

功能概述 Function overview

外形及安装尺寸图 Outline and mounting dimension diagram

125NA型外形及安装尺寸 125NA type outline and mounting dimension

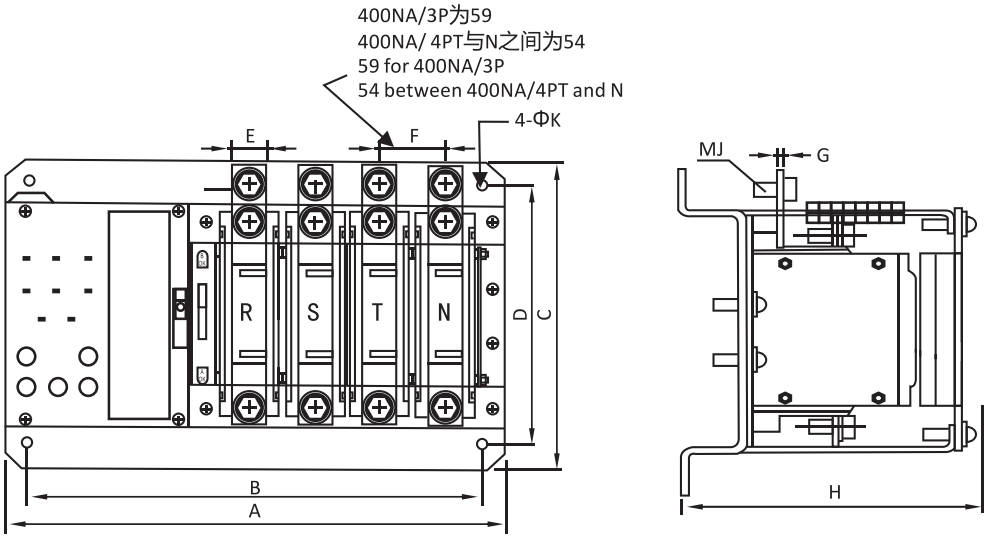

尺寸 Dimension / 型号 Model	A			B			C	D	E	F	G	H	J	K
	2P	3P	4P	2P	3P	4P								
20-32A	216	243	270	196	223	250	184	167	12	27	3	110	5	9
40-125A	237	274	311	217	254	290	184	167	20	37	3	110	8	9
160-250A	-	322	372	-	302	352	290	200	20	49	5	146	8	10
315-400A	-	352	402	-	332	382	290	200	30	-	6	146	10	10

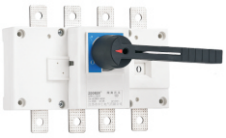

编码原则 Coding principle

SZRH1系列负荷隔离开关 SZRH1 Series load isolation switch

产品名称 Product name	壳架等级 Frame size	极数 No. of poles	操作方式 Operation method	额定电流A Rated current A
SZRH1	100	3		100
	100:100型 160:160型 250:250型 400:400型 630:630型 1600:1600型 100:100 type 160:160 type 250:250 type 400:400 type 630:630 type 1600:1600 type	3P 4P	缺省:柜内 J:柜外 Default : Inside the cabinet J: Outside the cabinet	16,25,32,40,63,80, 100,125,160,200, 225,250,315,400, 500,630,800,1000, 1250,1600
SZRH1	100	3		100

订货代号即: SZRH11003100
Order code: SZRH11003100

技术参数 Technical parameter

极数：3、4
额定工作电压(V)Ue：400
使用类别 ：AC-22B
环境 : 使用环境温度: -5℃至 +40℃
海拔高度 ：≤2000m
符合GB/T14048.3/IEC 60947-3的标准
认证

No. of poles : 3,4
Rated working voltage (V) Ue : 400
Utilization category : AC-22B
Environment : Operating ambient temperature: -5℃ to +40℃
Altitude : ≤2000m
It conforms to GB/T14048.3/IEC 60947-3 standard
Certificate

壳架电流 Frame current	100	160	250	400	630	1600
额定电压(V)Ue Rated voltage (V) Ue	400					
额定绝缘电压(V)Ui Rated insulation voltage (V) Ui	1000					
额定冲击耐受电压(V)Uimp Rated impulse withstand voltage (V) Uimp	12					
额定电流(A)Ie Rated current (A) Ie	16,25,32,40 63,80,100	100,125,160	200,225, 250	315,400	500,630	1000,1250 1600
额定短时耐受电流(kA)Icw/1s Rated short-time withstand current (kA) Icw/1s	2	12	12	20	25	50

功能概述 Function overview

外形及安装尺寸图 Outline and mounting dimension diagram

SZRH1-800A~1600A柜内操作
SZRH1-800A~1600A cabinet operation

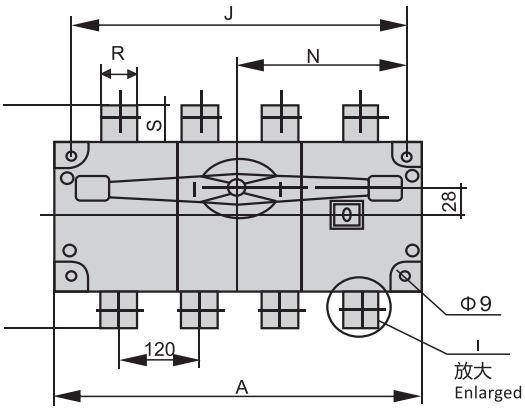

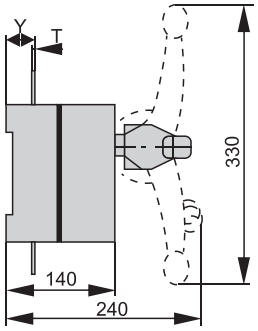

SZRH1-800A~1600A柜内操作侧视图
Side view of SZRH1-800A~1600A cabinet operation

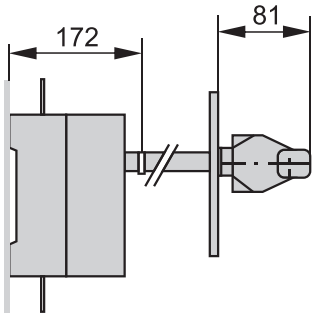

SZRH1-800A~1600A柜内操作开孔尺寸
SZRH1-800A~1600A cabinet operation holing dimension

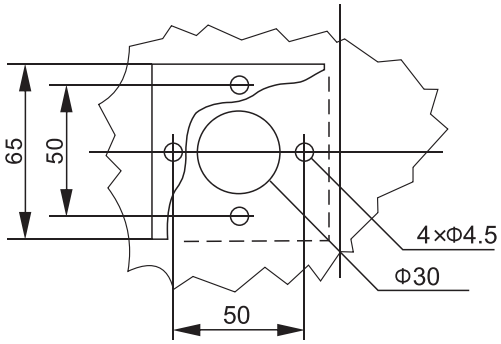

800~1000A接线端子
800~1000A wiring terminal

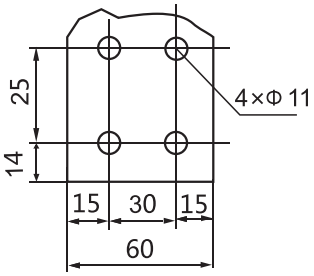

1250A~1600A接线端子
1250A~1600A wiring terminal

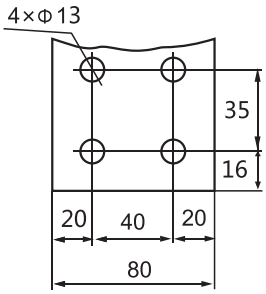

800~1600A隔离开关外形及安装尺寸
Outline and mounting dimension of 800~1600A isolation switch

规格 Specification	外形尺寸与安装尺寸 Outline and mounting dimension								
	A	B	J	K	N	R	S	T	Y
800~1000A/3	378	312	353	175	185	60	55	8	48
800~1000A/4	498	312	473	175	246	60	55	8	48
1250A/3	378	356	353	175	185	80	68	8	48
1250A/4	498	356	473	175	246	80	68	8	48
1600A/3	378	356	353	175	185	80	68	10	49
1600A/4	498	356	473	175	246	80	68	10	49

产品系列 Product series	产品型号 Product model	符合标准 Executive standard	额定电压 (V) Rated voltage (V)	额定电流 (A) Rated current (A)	分断能力 (kA) Breaking capacity (kA)	功能 Function	极数 No. of poles	脱扣特性 Tripping characteristic	机械寿命 Mechanical life	接线能力 Wiring capacity	可配附件 Applicable accessory
SZRB2-40系列 “相线+中性线”小型断路器 SZRB2-40 series "phase line+ neutral line" miniature circuit breaker	SZRB2-40	IEC60898-1 GB/T10963.1	AC230	6-32	6	过载保护 短路保护 控制 隔离 Overload protection Short circuit protection Control Isolation	1P+N	C	20000	16mm²	/
SZRB2LE-40系列剩余电流动作断路器 SZRB2LE-40 series residual current operated circuit breaker	SZRB2LE-40	IEC61009-1 GB/T16917.1	AC230	6-32	6	过载保护 短路保护 控制 隔离 漏电保护 Overload protection Short circuit protection Control Isolation Leakage protection	1P+N	C	20000	16mm²	/
SZRB2N/SZRB2H、系列小型断路器 SZRB2N/SZRB2H series miniature circuit breaker	SZRB2N-63 SZRB2H-63	IEC60898-1 GB/T10963.1	AC230/400	1-63	6/10	过载保护 短路保护 控制 隔离 Overload protection Short circuit protection Control Isolation	1P 2P 3P 4P	C/D	20000	25mm²	OF,SD,MX, MX+OF MV,MN, MV+MN
SZRB2NLE/ SZRB2HLE 剩余电流动作断路器 SZRB2NLE/ SZRB2HLE residual current operated circuit breaker	SZRB2NLE-63 SZRB2HLE-63	IEC61009-1 GB/T16917.1	AC230/400	6-63	6/10	过载保护 短路保护 控制 隔离 漏电保护 Overload protection Short circuit protection Control Isolation Leakage protection	1P+N 2P 3P 3P+N 4P	C/D	20000	25mm²	OF,SD
SZRB2系列高额定电流小型断路器 SZRB2 series high rated current miniature circuit breaker	SZRB2-125	IEC60947-2 GB/T14048.2	AC230/400	63-125	10	过载保护 短路保护 控制 隔离 Overload protection Short circuit protection Control Isolation	1P 2P 3P 4P	C/D	10000	50mm²	OF,SD,MX, MX+OF MV,MN, MV+MN
SZRB2LE系列剩余电流动作断路器 SZRB2LE series residual current operated circuit breaker	SZRB2LE-125	IEC60947-2 GB/T14048.2	AC230/400	63-100	10	过载保护 短路保护 控制 隔离 漏电保护 Overload protection Short circuit protection Control Isolation Leakage protection	1P+N 2P 3P 3P+N 4P	C/D	10000	50mm²	OF,SD
SZRB2Z系列直流小型断路器 SZRB2Z series DC miniature circuit breaker	SZRB2Z-63	IEC60947-2 GB/T14048.2	DC 125/250 DC 500/1000	1-63	6/10	过载保护 短路保护 控制 隔离 Overload protection Short circuit protection Control Isolation	1P 2P 4P	B/C	20000	25mm²	OF,SD,MX, MX+OF
SZRG2系列模数化隔离开关 SZRG2 series modular isolation switch	SZRG2-125	IEC60947-3 GB/T14048.3	AC230/400	32-125	–	控制 隔离 Control Isolation	1P 2P 3P 4P	–	50000	50mm²	/
SZRGQ系列自复式过欠压保护器 SZRGQ series self-reset overvoltage/ undervoltage protective device	SZRGQ	《民用建筑电气设计规范》 JGJ-242 2011版 *Code for Electrical Design of Civil Buildings* JGJ-242 2011 version GB/T14048.5 IEC60947-5	AC230/400	32-80	–	控制 过压保护 欠压保护 自动复位 Control Overvoltage protection Undervoltage protection Automatic reset	1P+N 3P+N	–	≥10万次 ≥10^5 times	35mm²	/
SZRY1系列电涌保护器 SZRY1 series surge protective device	SZRY1	IEC61643-1 GB/T18802.1	AC275/340 AC385/440	20kA - 100kA	–	–	1P+N 2P 3P 3P+N 4P	–	–	–	默认:无/ YX:遥信 Default: None/ YX: Remote signaling

编码原则 Coding principle

SZRB2-40系列“相线+中性线”小型断路器
SZRB2-40 Series "phase line+neutral line" miniature circuit breaker

产品名称 Product name	壳架等级 Frame size	极数 No. of poles	脱扣类型 Release type	额定电流A Rated current A
SZRB2	40	1P+N	C	16A
	40:40型 40:40 type	1PN:1P+N	C:C型 C: C type	6:6A 10:10A 16:16A 20:20A 25:25A 32:32A
SZRB2	40	1PN	C	16

订货代号即: SZRB2401PNC16
Order code: SZRB2401PNC16

SZRB2-40系列“相线+中性线”小型断路器具有以下功能:
The SZRB2-40 series "phase line+neutral line" miniature circuit breaker has the following functions:

过载保护	Overload protection
短路保护	Short circuit protection
控制	Control
隔离	Isolation
适用于民用建筑/基础设施	Applicable to civil building/infrastructure

技术参数 Technical parameter

额定电流 Rated current	6,10,16,20,25,32A
壳架等级 Frame size	40A
极数 No. of poles	1P+N
额定工作电压 Rated working voltage	230V
分断能力 Breaking capacity	6000A
隔离功能 Isolation function	分断手柄位置指示 Switch-off handle position indication
机械寿命 Mechanical life	20000次 20000 times
电气寿命 Electrical life	4000次 4000 times
环境 Environment	工作温度 Working temperature: -30℃~70℃
海拔高度 Altitude	≤2000m
接线 Wiring	可采用上进线下出线方式或下进线上出线方式且无需降容 端子接线面积 适用于16mm²及以下导线 It can adopt either upper inlet and lower outlet method or lower inlet and upper outlet method without the need for capacity reduction Terminal wiring area Suitable for wire of 16mm² and below
安装 Installation	模块化结构，可方便地安装在DIN标准导轨上 额定扭矩: 1.5N Modular structure enables easy installation on standard DIN rail Rated torque: 1.5N
■ 防护等级 Protection level:	IP20
■ 符合标准 Executive standard:	GB/T 10963.1/IEC 60898-1
■ 符合认证 Executive certification:	CCC

脱扣特性 Tripping characteristic

■ C型曲线 C type curve

□ 保护常规负载和配电线缆 Protection of general load and distribution cable

□ 脱扣特性：瞬时脱扣范围(5~10)In Tripping characteristic: instantaneous tripping range (5~10) In

功能概述 Function overview

外形及安装尺寸图 Outline and mounting dimension diagram

本系列断路器适用于TH35-7.5型钢安装导轨安装,外形及安装尺寸(见图1)。
This series circuit breaker is suitable for TH35-7.5 steel DIN rail installation, see Figure 1 for the outline and mounting dimension.

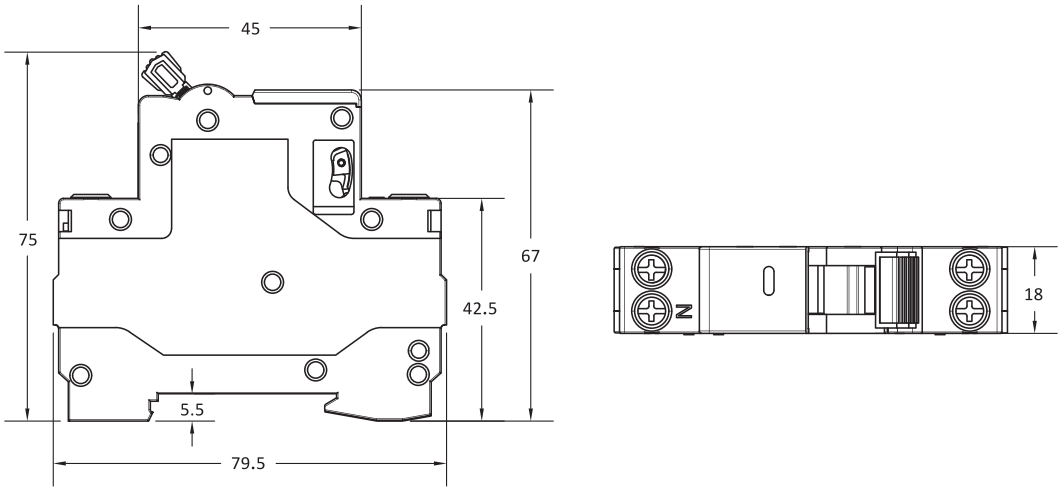

图1 SZRB2- 40外形尺寸图(mm)
Figure 1: SZRB2-40 Outline dimension diagram (mm)

编码原则 Coding principle

SZRB2N系列小型断路器 SZRB2N Series miniature circuit breaker

产品名称 Product name	壳架等级 Frame size	极数 No. of poles	脱扣类型 Release type	额定电流 Rated current
SZRB2N	63	2P	C	16A
	63:63型 63:63 type	1P 2P 3P 4P	C:C型 D:D型 C: C type D: D type	1:1A,2:2A,3:3A 4:4A,5:5A,6:6A 10:10A,16:16A 20:20A,25:25A 32:32A,40:40A 50:50A,63:63A
SZRB2N	63	2P	C	16

订货代号即: SZRB2N632PC16
Order code: SZRB2N632PC16

SZRB2N系列小型断路器具有以下功能:
The SZRB2N series miniature circuit breaker has the following functions:

短路保护	Short circuit protection
过载保护	Overload protection
控制	Control
隔离	Isolation
SZRB2N断路器适用于工业、民用建筑、能源及基础设施等领域低压终端配电。	SZRB2N circuit breaker is suitable for low-voltage terminal distribution in industrial, civil building, energy and infrastructure fields.

技术参数 Technical parameter

额定电流 Rated current	1,2,3,4,5,6,10,16,20,25,32,40,50,63A
额定工作电压 Rated working voltage	230V/400V AC
极数 No. of poles	1/2/3/4P
最大工作电压 Maximum operating voltage	440V AC
分断能力 Breaking capacity	6000A
冲击耐受电压 Impulse withstand voltage	6kV
机械寿命 Mechanical life	20000次 20000 times
电气寿命 Electrical life	10000次 10000 times
环境 Environment	使用环境温度: -30℃至+70℃ Operating ambient temperature: -30℃ to +70℃
海拔高度 Altitude	≤2000m

接线 Wiring	可采用上进线下出线方式或下进线上出线方式且无需降容 端子接线面积 适用于25mm²及以下导线 It can adopt either upper inlet and lower outlet method or lower inlet and upper outlet method without the need for capacity reduction Terminal wiring area Suitable for wire of 25mm² and below
安装 Installation	模块化结构，可方便地安装在DIN标准导轨上 可垂直、水平或背部安装，特性不受影响 额定扭矩: 2.5Nm Modular structure enables easy installation on standard DIN rail It can be installed vertically, horizontally or on the back without affecting its characteristic Rated torque: 2.5Nm
附件 Accessory	OF辅助触头(左装)，SD报警触头(左装)，MX分励脱扣器(右装) MX+OF分励+辅助(右装) MN欠压脱扣器(右装)，MV过压脱扣器(右装)，MV+MN过欠压脱扣器(右装) OF auxiliary contact (left mounted), SD alarm contact (left mounted), MX shunt release (right mounted) MX+OF shunt+auxiliary (right mounted) MN undervoltage release (right mounted), MV overvoltage release (right mounted), MV+MN overvoltage/undervoltage release (right mounted)

■ 符合标准 Executive standard： GB/T 10963.1/IEC 60898-1
■ 符合认证 Executive certification：

脱扣特性 Tripping characteristic

■ C型曲线 C type curve
□ 保护常规负载和配电线缆
□ 脱扣特性：瞬时脱扣范围(5~10)In
□ Protection of general load and distribution cable
□ Tripping characteristic: instantaneous tripping range (5~10) In

■ D型曲线 D type curve
□ 保护起动电流大的冲击性负荷
□ 脱扣特性：瞬时脱扣范围(10~20)In
□ Protection of the impact load with high starting current
□ Tripping characteristic: instantaneous tripping range (10~20) In

功能概述 Function overview

外形及安装尺寸图 Outline and mounting dimension diagram

本系列断路器适用于TH35-7.5型钢安装导轨安装,外形及安装尺寸(见图1)。
This series circuit breaker is suitable for TH35-7.5 steel DIN rail installation, see Figure 1 for the outline and mounting dimension.

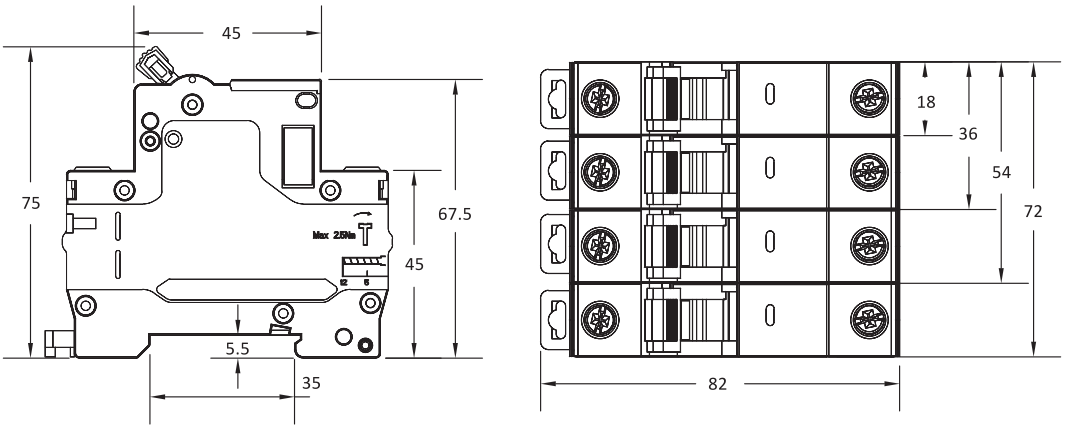

图1 SZRB2N-63外形尺寸图 (mm)
Figure 1: SZRB2N-63 Outline dimension diagram (mm)

编码原则 Coding principle

SZRB2H系列小型断路器 SZRB2H Series miniature circuit breaker

产品名称 Product name	壳架等级 Frame size	极数 No. of poles	脱扣类型 Release type	额定电流 Rated current
SZRB2H	63	2P	C	16A
	63:63型 63:63 type	1P 2P 3P 4P	C:C型 D:D型 C: C type D: D type	1:1A,2:2A,3:3A 4:4A,5:5A,6:6A 10:10A,16:16A 20:20A,25:25A 32:32A,40:40A 50:50A,63:63A
SZRB2H	63	2P	C	16

订货代号即: SZRB2N632PC16
Order code: SZRB2N632PC16

SZRB2H系列小型断路器具有以下功能:
The SZRB2H series miniature circuit breaker has the following functions:

短路保护 Short circuit protection
过载保护 Overload protection
控制 Control
隔离 Isolation

SZRB2H断路器适用于工业、民用建筑、能源及基础设施等领域低压终端配电。

SZRB2H circuit breaker is suitable for low-voltage terminal distribution in industrial, civil building, energy and infrastructure fields.

技术参数 Technical parameter

额定电流 Rated current	1,2,3,4,5,6,10,16,20,25,32,40,50,63A
额定工作电压 Rated working voltage	230V/400V AC
极数 No. of poles	1/2/3/4P
最大工作电压 Maximum operating voltage	440V AC
分断能力 Breaking capacity	10000A
冲击耐受电压 Impulse withstand voltage	6kV
机械寿命 Mechanical life	20000次 20000 times
电气寿命 Electrical life	10000次 10000 times
环境 Environment	使用环境温度: -30℃至+70℃ Operating ambient temperature: -30℃ to +70℃
海拔高度 Altitude	≤2000m

接线 Wiring	可采用上进线下出线方式或下进线上出线方式且无需降容 端子接线面积 适用于25mm²及以下导线 It can adopt either upper inlet and lower outlet method or lower inlet and upper outlet method without the need for capacity reduction Terminal wiring area Suitable for wire of 25mm² and below
安装 Installation	模块化结构，可方便地安装在DIN标准导轨上 可垂直、水平或背部安装，特性不受影响 额定扭矩: 2.5Nm Modular structure enables easy installation on standard DIN rail It can be installed vertically, horizontally or on the back without affecting its characteristic Rated torque: 2.5Nm
附件 Accessory	OF辅助触头(左装)， SD报警触头(左装)，MX分励脱扣器(右装) MX+OF分励+辅助(右装) MN欠压脱扣器(右装)，MV过压脱扣器(右装)，MV+MN过欠压脱扣器(右装) OF auxiliary contact (left mounted), SD alarm contact (left mounted), MX shunt release (right mounted) MX+OF shunt+auxiliary (right mounted) MN undervoltage release (right mounted), MV overvoltage release (right mounted), MV+MN overvoltage/undervoltage release (right mounted)

■ 符合标准 Executive standard： GB/T 10963.1/IEC 60898-1
■ 符合认证 Executive certification：

脱扣特性 Tripping characteristic

■ C型曲线 C type curve
□ 保护常规负载和配电线缆
□ 脱扣特性：瞬时脱扣范围(5~10)In
□ Protection of general load and distribution cable
□ Tripping characteristic: instantaneous tripping range (5~10) In

■ D型曲线 D type curve
□ 保护起动电流大的冲击性负荷
□ 脱扣特性：瞬时脱扣范围(10~20)In
□ Protection of the impact load with high starting current
□ Tripping characteristic: instantaneous tripping range (10~20) In

功能概述 Function overview

外形及安装尺寸图 Outline and mounting dimension diagram

本产品为导轨安装，外形及安装尺寸(见图1)。
This product is for DIN rail installation, see Figure 1 for outline and mounting dimension.

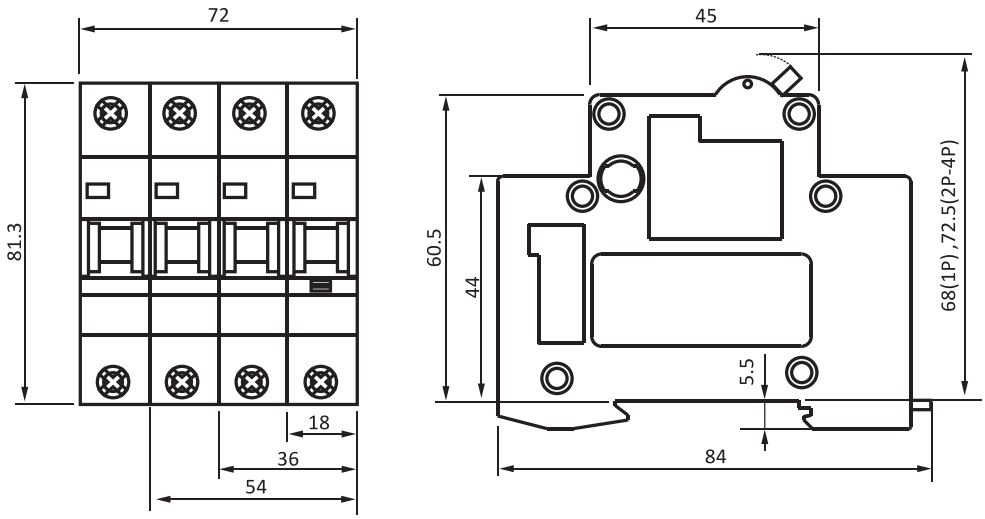

图1 SZRB2H-63外形尺寸图
SZRB2H-63 Outline dimension diagram

编码原则 Coding principle

SZRB2-125系列高额定电流小型断路器 SZRB2-125 Series high rated current miniature circuit breaker

产品名称 Product name	壳架等级 Frame size	极数 No. of poles	脱扣类型 Release type	额定电流 Rated current
SZRB2	125	2P	C	63A
	125:125型 125:125 type	1P 2P 3P 4P	C:C型 D:D型 C: C type D: D type	63:63A 80:80A 100:100A 125:125A
SZRB2	125	2P	C	63

订货代号即: SZRB21252PC63
Order code: SZRB21252PC63

SZRB2-125系列高额定电流小型断路器具有以下功能:
The SZRB2-125 series high rated current miniature circuit breaker has the following functions:

短路保护	Short circuit protection
过载保护	Overload protection
控制	Control
隔离	Isolation
适用于工业等	Suitable for industrial use, etc

技术参数 Technical parameter

额定电流 Rated current	63,80,100,125A
壳架等级 Frame size	125A
极数 No. of poles	1/2/3/4P
脱扣曲线 Tripping curve	C: 8.5In D: 12In
额定工作电压 Rated working voltage	230/400V AC
冲击耐受电压Uimp Impulse withstand voltage Uimp	6kV
快速闭合 Fast closing	保证冲击性负载的可靠工作，延长断路器的电气寿命 It ensures reliable operation of impactive load and extends the electrical life of circuit breaker
分断能力 Breaking capacity	10kA
机械寿命 Mechanical life	10000次 10000 times
电气寿命 Electrical life	4000次 4000 times
环境 Environment	工作温度 Working temperature：-30℃~70℃
海拔高度 Altitude	≤2000m

接线 Wiring	端子接线面积 50mm²及以下 Terminal wiring area 50mm² and below
安装 Installation	模块化结构，可方便地安装在DIN标准导轨上 额定扭矩: 3.5Nm Modular structure enables easy installation on standard DIN rail Rated torque: 3.5Nm
附件 Accessory	OF辅助触头(左装)，SD报警触头(左装)，MX分励脱扣器(右装) MX+OF分励+辅助(右装) MN欠压脱扣器(右装)，MV过压脱扣器(右装)，MV+MN过欠压脱扣器(右装) OF auxiliary contact (left mounted), SD alarm contact (left mounted), MX shunt release (right mounted) MX+OF shunt+auxiliary (right mounted) MN undervoltage release (right mounted), MV overvoltage release (right mounted), MV+MN overvoltage/undervoltage release (right mounted)

- ■ 防护等级 Protection level： IP20
- ■ 符合标准 Executive standard： GB/T 14048.2/IEC 60947-2
- ■ 符合认证 Executive certification： CCC

脱扣特性 Tripping characteristic

■ C型曲线 C type curve
□ 保护常规负载和配电线缆
□ 脱扣特性：瞬时脱扣范围(6.8~10.2)In
□ Protection of general load and distribution cable
□ Tripping characteristic: instantaneous tripping range (6.8~10.2) In

■ D型曲线 D type curve
□ 保护起动电流大的冲击性负荷
□ 脱扣特性：瞬时脱扣范围(9.6~14.4)In
□ Protection of the impact load with high starting current
□ Tripping characteristic: instantaneous tripping range (9.6~14.4) In

功能概述 Function overview

外形及安装尺寸图 Outline and mounting dimension diagram

本产品为导轨安装，外形及安装尺寸(见图1)。
This product is for DIN rail installation, see Figure 1 for outline and mounting dimension.

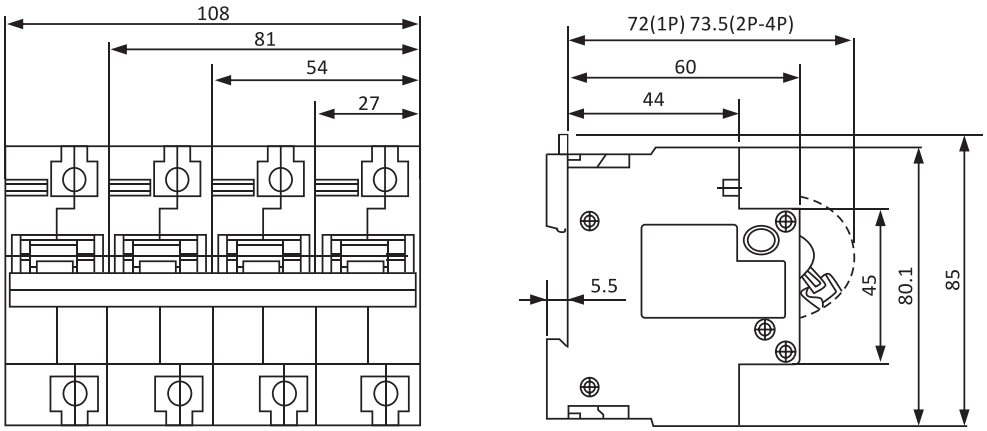

图1 外形及安装尺寸
Figure 1 Outline and mounting dimension

编码原则 Coding principle

SZRB2Z系列直流小型断路器 SZRB2Z Series DC miniature circuit breaker

产品名称 Product name	壳架等级 Frame size	极数 No. of poles	脱扣类型 Release type	额定电流 A Rated current A
SZRB2Z	63	2P	C	16A
	63:63型 63:63 type	1P 2P 4P	B:B型 C:C型 B: B type C: C type	1:1A,2:2A,3:3A 4:4A,5:5A,6:6A 10:10A,16:16A 20:20A,25:25A 32:32A,40:40A 50:50A,63:63A
SZRB2Z	63	2P	C	16

订货代号即: SZRB2Z632PC16
Order code: SZRB2Z632PC16

SZRB2Z系列直流小型断路器具有以下功能:
The SZRB2Z series DC miniature circuit breaker has the following functions:

过载保护 Overload protection	短路保护 Short circuit protection	控制 Control	隔离 Isolation

技术参数 Technical parameter

额定电流 Rated current	1,2,3,4,5,6,10,16,20,25,32,40,50,63A
壳架等级 Frame size	63A
极数 No. of poles	1/2P
脱扣曲线 Tripping curve	C: Ii=8.5In±20%
额定工作电压 Rated working voltage	DC:1P 125V/250V 2P 250V/500V
冲击耐受电压Uimp Impulse withstand voltage Uimp	4kV
快速闭合 Fast closing	保证冲击性负载的可靠工作，延长断路器的电气寿命 It ensures reliable operation of impactive load and extends the electrical life of circuit breaker
分断能力 Breaking capacity	1P/2P 125V/250V 10kA 1P/2P 250V/500V 10kA
机械寿命 Mechanical life	20000次 20000 times
电气寿命 Electrical life	3000次 3000 times
环境 Environment	工作温度 Working temperature：-30℃~70℃
海拔高度 Altitude	≤2000m
接线 Wiring	接线端子Wiring terminal 35mm²

直流断路器接线时请注意极性
Please pay attention to polarity when wiring DC circuit breaker

连接示例 Connection example	1P 单极	2P 2极	2P 2极	2P 2极
分断能力 Breaking capacity	10kA/6kA	10kA/6kA	10kA/6kA	10kA/6kA
Un(额定电压) Un (rated voltage)	125V/250V	250V/500V	250V/500V	250V/500V
Unmax $U_{L+/L-}$	125V/250V	250V/500V	250V/500V	250V/500V
Unmax $U_{L/⏚}$	125V/250V	250V/500V	250V/500V	125V/250V

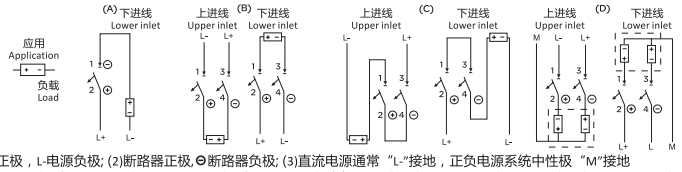

备注: (1)L+电源正极，L-电源负极; (2)断路器正极,⊖断路器负极; (3)直流电源通常“L-”接地，正负电源系统中性极“M”接地
Notes: (1) L+ positive pole of power supply, L- negative pole of power supply; (2) Circuit breaker positive pole, Circuit breaker negative pole; (3) DC power supply "L-" is usually grounded, and the neutral pole "M" of the positive and negative power supply system is grounded

安装 Installation	模块化结构，可方便地安装在DIN标准导轨上 额定扭矩: 2.5N Modular structure enables easy installation on standard DIN rail Rated torque: 2.5N

- 防护等级 Protection level： IP20
- 附件: OF辅助触头(左装) ,SD报警触头(左装),MX分励脱扣器(右装),MX+OF分励+辅助(右装)
- Accessory: OF auxiliary contact (left mounted), SD alarm contact (left mounted), MX shunt release (right mounted), MX+OF shunt+auxiliary (right mounted)
- 符合标准 Executive standard： GB/T 14048.2/IEC 60947-2
- 符合认证 Executive certification：

脱扣特性 Tripping characteristic

- B型曲线 B type curve
  - □保护短路电流较小的负载
  - □脱扣特性：瞬时脱扣范围(4.4~6.6)In
  - □Protection of load with low short-circuit current
  - □Tripping characteristic: Instantaneous tripping range (4.4~6.6) In
- C型曲线 C type curve
  - □保护常规负载和配电线缆
  - □脱扣特性：瞬时脱扣范围(6.8~10.2)In
  - □Protection of general load and distribution cable
  - □Tripping characteristic: Instantaneous tripping range (6.8~10.2) In

功能概述 Function overview

外形及安装尺寸图 Outline and mounting dimension diagram

本产品为导轨安装，外形及安装尺寸(见图1)。
This product is for DIN rail installation, see Figure 1 for outline and mounting dimension.

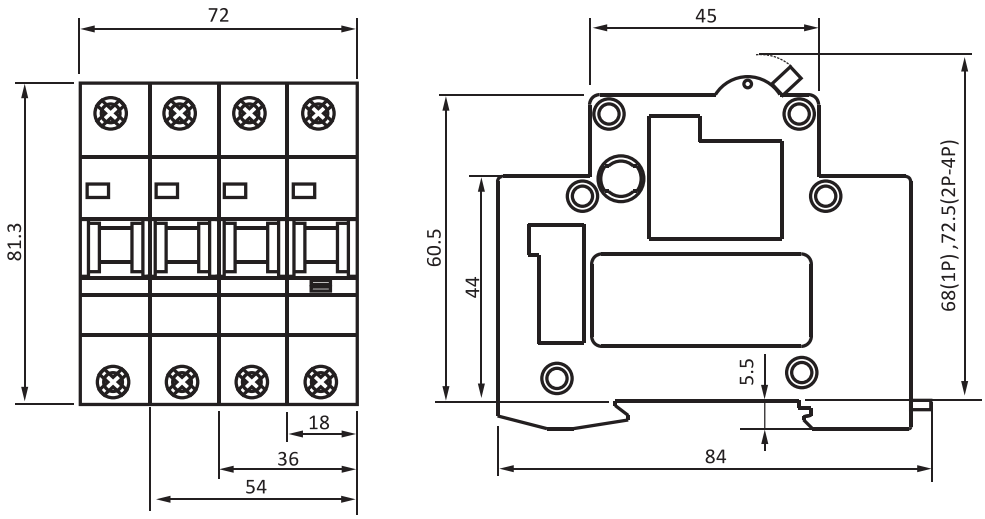

图1 外形及安装尺寸图
Figure 1 Outline and mounting dimension diagram

编码原则 Coding principle

SZRB2LE-40系列剩余电流动作断路器 SZRB2LE-40 Series residual current operated circuit breaker

产品名称 Product name	壳架等级 Frame size	极数 No. of poles	脱扣类型 Release type	额定电流 Rated current	剩余电流 Residual current
SZRB2LE	40	1P+N	C	16A	/
	40:40型 40:40 type	1PN:1P+N	C:C型 C: C type	6:6A 10:10A 16:16A 20:20A 25:25A 32:32A	缺省:30mA Default: 30mA
SZRB2LE	40	1PN	C	16	/

订货代号即: SZRB2LE401PNC16
Order code: SZRB2LE401PNC16

SZRB2LE-40系列剩余电流动作断路器具有以下功能:
The SZRB2LE-40 series residual current operated circuit breaker has the following functions:

短路保护	Short circuit protection
过载保护	Overload protection
漏电保护	Leakage protection
对直接、间接接触提供人身保护	It provides personal protection for direct and indirect contact
适用于住宅/工业	Suitable for residential/industrial use

技术参数 Technical parameter

额定电流 Rated current	6,10,16,20,25,32A
壳架等级 Frame size	40A
极数 No. of poles	1P+N
额定工作电压 Rated working voltage	230V
保护类型 Protection type	AC类 Class AC
漏电类型 Leakage type	电子式 Electronic
分断能力 Breaking capacity	6000 A
额定剩余动作电流 Rated residual operating current	30mA
额定剩余接通和分断能力I△m Rated residual making and breaking capacity I△m	500
机械寿命 Mechanical life	20000次 20000 times
电气寿命 Electrical life	4000次 4000 times
环境 Environment	工作温度 Working temperature : -20℃~60℃
海拔高度 Altitude	≤2000m

接线 Wiring	上下连接方式 端子接线面积 Upper and lower wiring method Terminal wiring area
安装 Installation	适用于16mm²及以下导线 模块化结构，可方便地安装在DIN标准导轨上 额定扭矩: 1.5N Suitable for wire of 16mm² and below Modular structure enables easy installation on standard DIN rail Rated torque: 1.5N

■ 防护等级 Protection level : IP20
■ 符合标准 Executive standard : GB/T 16917.1/IEC 61009-1
■ 符合认证 Executive certification : CCC

脱扣特性 Tripping characteristic
■ C型曲线 C type curve
□ 保护常规负载和配电线缆 Protection of general load and distribution cable
□ 脱扣特性：瞬时脱扣范围(5~10)In Tripping characteristic: instantaneous tripping range (5~10) In

功能概述 Function overview

外形及安装尺寸图 Outline and mounting dimension diagram

外形及安装尺寸见下图1，安装导轨尺寸见下图2。
See following Figure 1 for outline and mounting dimension, and Figure 2 for mounting rail dimension.

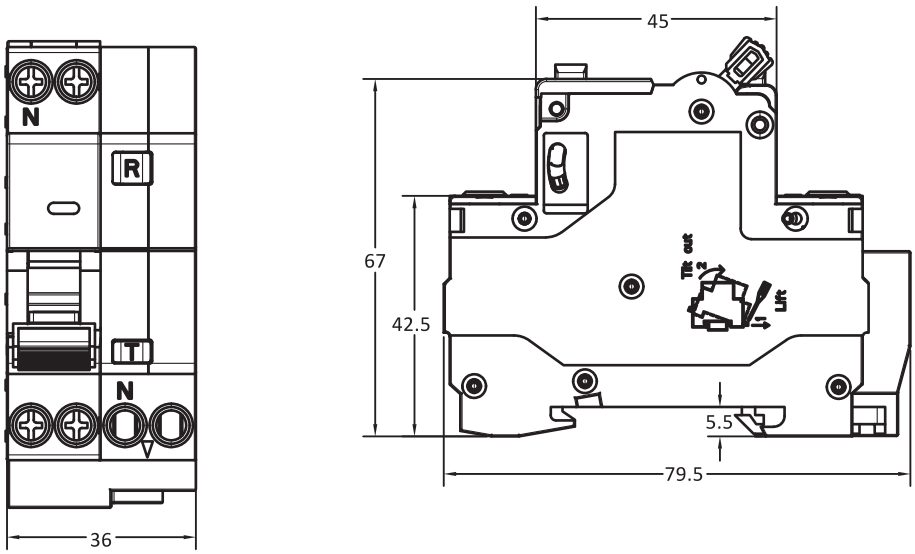

图1 外形尺寸和安装尺寸mm
Figure 1 Outline and mounting dimension mm

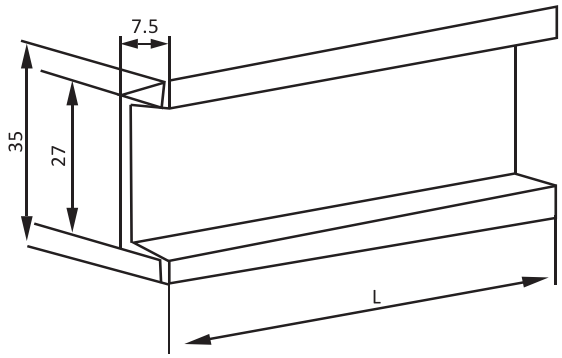

图2 外安装导轨尺寸
Figure 2 Mounting rail dimension

编码原则 Coding principle

SZRB2NLE-63系列剩余电流动作断路器 SZRB2NLE-63 Series residual current operated circuit breaker

产品名称 Product name	壳架等级 Frame size	极数 No. of poles	脱扣类型 Release type	额定电流 Rated current	剩余电流 Residual current
SZRB2NLE	63	2P	C	16A	/
	63:63型 63:63 type	1PN:1P+N 2P 3P 3PN:3P+N 4P	C:C型 D:D型 C: C type D: D type	1:1A,2:2A,3:3A 4:4A,5:5A,6:6A 10:10A,16:16A 20:20A,25:25A 32:32A,40:40A 50:50A,63:63A	缺省:30mA Default: 30mA R2:50mA R3:100mA R4:300mA
SZRB2NLE	63	2P	C	16	/

订货代号即: SZRB2NLE632PC16
Order code: SZRB2NLE632PC16

SZRB2NLE-63系列剩余电流动作断路器具有以下功能:
The SZRB2NLE-63 series residual current operated circuit breaker has the following functions:

漏电保护
Leakage protection

短路保护
Short circuit protection

过载保护
Overload protection

技术参数 Technical parameter

额定电流 Rated current	1,2,3,4,5,6,10,16,20,25,32,40,50,63A
额定工作电压 Rated working voltage	230/400V AC
极数 No. of poles	1P+N/2P/3P/3P+N/4P
分断能力 Breaking capacity	6000A
漏电保护类型 Leakage protection type	AC型 AC type
额定剩余动作电流 Rated residual operating current	30mA,50mA,100mA,300mA
机械寿命 Mechanical life	20000次 20000 times
电气寿命 Electrical life	10000次 10000 times
脱扣指示 Tripping indication	漏电模块操作脱扣按钮突起剩余电流动作脱扣指示 Leakage module operating trip button protrusion, residual current operation trip indication
手动控制 Manual control	断路器和剩余电流动作装置分别复位，剩余电流动作防止暂态过电压（闪电、电网操作等）引起的误动作 The circuit breaker and residual current operating device are reset separately, and residual current operation prevents misoperation caused by transient overvoltage (lightning, grid operation, etc.)
环境 Environment	使用环境温度 Operating ambient temperature：-20℃~60℃
海拔高度 Altitude	

接线 Wiring	端子接线面积 适用于25mm²及以下导线 Terminal wiring area Suitable for wire of 25mm² and below
安装 Installation	模块化结构，可方便地安装在DIN标准导轨上 额定扭矩: 2.5Nm Modular structure enables easy installation on standard DIN rail Rated torque: 2.5Nm
附件 Accessory	OF辅助触头(左装)， SD报警触头(左装) OF auxiliary contact (left mounted), SD alarm contact (left mounted)

■ 符合标准 Executive standard： GB/T 16917.1/IEC 61009-1
■ 符合认证 Executive certification：

对突然施加或缓慢上升的剩余正弦交流电流能确保脱扣
It can ensure the tripping of residual sinusoidal AC current that is suddenly applied or slowly rising

脱扣特性 Tripping characteristic

■ C型曲线 C type curve
□ 保护常规负载和配电线缆
□ 脱扣特性：瞬时脱扣范围(5~10)In
□ Protection of general load and distribution cable
□ Tripping characteristic: instantaneous tripping range (5~10) In

■ D型曲线 D type curve
□ 保护起动电流大的冲击性负荷
□ 脱扣特性：瞬时脱扣范围(10~20)In
□ Protection of the impact load with high starting current
□ Tripping characteristic: instantaneous tripping range (10~20) In

功能概述 Function overview

外形及安装尺寸图 Outline and mounting dimension diagram

SZRB2NLE-63外形及安装尺寸见图1、表1、图2
The outline and mounting dimension of SZRB2NLE-63 is shown in Figure 1, Table 1 and Figure 2

单位 Unit:mm

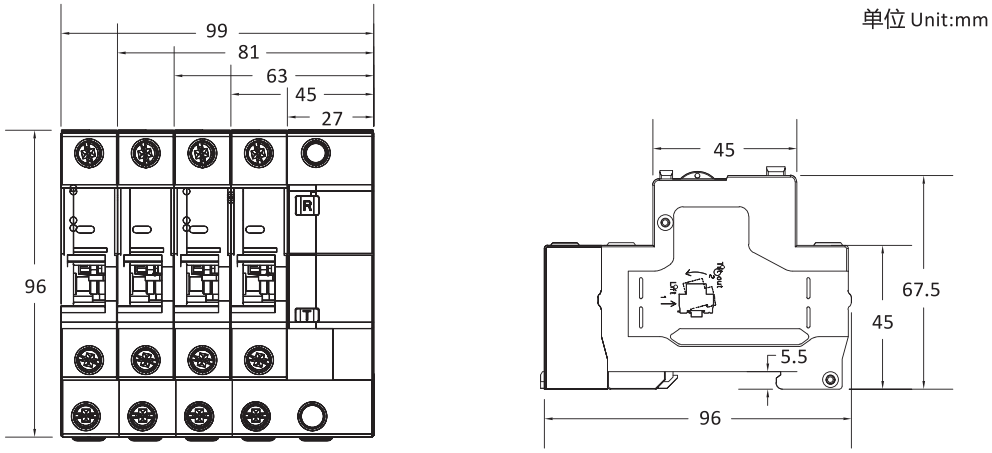

图1 Figure 1

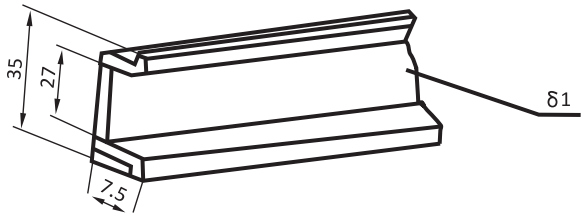

图2 Figure 2

极数 No. of poles	1P+N	2P	3P	3P+N	4P
Lmm	45	63	81	81	99

表1 Table 1

编码原则 Coding principle

SZRB2HLE-63系列剩余电流动作断路器 SZRB2HLE-63 Series residual current operated circuit breaker

产品名称 Product name	壳架等级 Frame size	极数 No. of poles	脱扣类型 Release type	额定电流 Rated current	剩余电流 Residual current
SZRB2HLE	63	2P	C	16A	/
	63:63型 63:63 type	1PN:1P+N 2P 3P 3PN:3P+N 4P	C:C型 D:D型 C: C type D: D type	1:1A,2:2A,3:3A 4:4A,5:5A,6:6A 10:10A,16:16A 20:20A,25:25A 32:32A,40:40A 50:50A,63:63A	缺省:30mA Default: 30mA R2:50mA R3:100mA R4:300mA
SZRB2HLE	63	2P	C	16	/

订货代号即: SZRB2HLE632PC16
Order code: SZRB2HLE632PC16

SZRB2HLE-63系列剩余电流动作断路器具有以下功能:
The SZRB2HLE-63 series residual current operated circuit breaker has the following functions:

漏电保护
Leakage protection

短路保护
Short circuit protection

过载保护
Overload protection

技术参数 Technical parameter

额定电流 Rated current	1,2,3,4,5,6,10,16,20,25,32,40,50,63A
额定工作电压 Rated working voltage	230/400V AC
极数 No. of poles	1P+N/2P/3P/3P+N/4P
分断能力 Breaking capacity	10000A
漏电保护类型 Leakage protection type	AC型 AC type
额定剩余动作电流 Rated residual operating current	30mA,50mA,100mA,300mA
机械寿命 Mechanical life	20000次 20000 times
电气寿命 Electrical life	10000次 10000 times
脱扣指示 Tripping indication	漏电模块操作脱扣按钮突起剩余电流动作脱扣指示 Leakage module operating trip button protrusion, residual current operation trip indication
手动控制 Manual control	断路器和剩余电流动作装置分别复位，剩余电流动作防止暂态过电压（闪电、电网操作等）引起的误动作 The circuit breaker and residual current operating device are reset separately, and residual current operation prevents misoperation caused by transient overvoltage (lightning, grid operation, etc.)
环境 Environment	使用环境温度 Operating ambient temperature：-20℃~60℃
海拔高度 Altitude	≤2000m

接线 Wiring	端子接线面积 适用于25mm²及以下导线 Terminal wiring area Suitable for wire of 25mm² and below
安装 Installation	模块化结构，可方便地安装在DIN标准导轨上 额定扭矩: 2.5Nm Modular structure enables easy installation on standard DIN rail Rated torque: 2.5Nm
附件 Accessory	OF辅助触头(左装)， SD报警触头(左装) OF auxiliary contact (left mounted), SD alarm contact (left mounted)

■ 符合标准 Executive standard： GB/T 16917.1/IEC 61009-1
■ 符合认证 Executive certification：

对突然施加或缓慢上升的剩余正弦交流电流能确保脱扣
It can ensure the tripping of residual sinusoidal AC current that is suddenly applied or slowly rising
脱扣特性 Tripping characteristic

■ C型曲线 C type curve
□ 保护常规负载和配电线缆
□ 脱扣特性：瞬时脱扣范围(5~10)In
□ Protection of general load and distribution cable
□ Tripping characteristic: instantaneous tripping range (5~10) In

■ D型曲线 D type curve
□ 保护起动电流大的冲击性负荷
□ 脱扣特性：瞬时脱扣范围(10~20)In
□ Protection of the impact load with high starting current
□ Tripping characteristic: instantaneous tripping range (10~20) In

功能概述 Function overview

外形及安装尺寸图 Outline and mounting dimension diagram

SZRB2HLE-63外形尺寸图
SZRB2H-63LE Outline dimension diagram

单位 Unit:mm

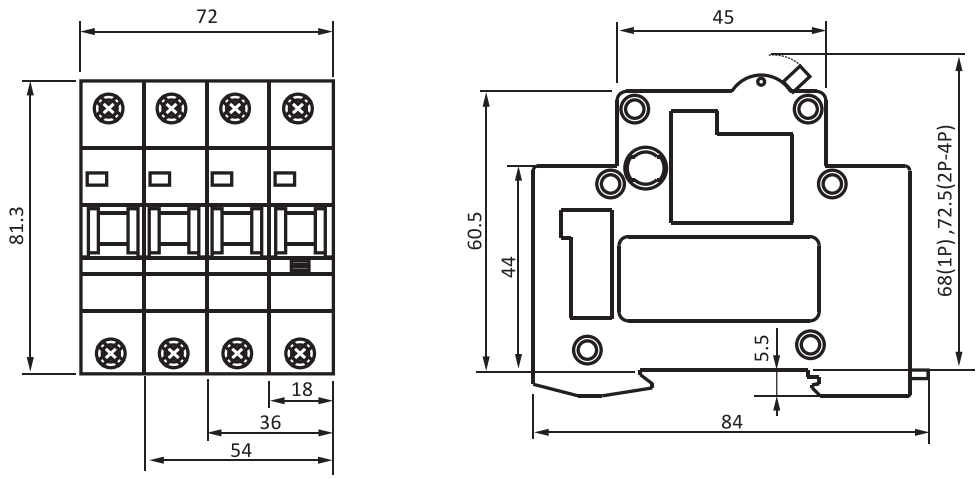

编码原则 Coding principle

SZRB2LE-125系列剩余电流动作断路器 SZRB2LE-125 Series residual current operated circuit breaker

产品名称 Product name	壳架等级 Frame size	极数 No. of poles	脱扣类型 Release type	额定电流 Rated current	剩余电流 Residual current
SZRB2LE	125	2P	C	63A	/
	125:125型 125:125 type	1PN:1P+N 2P 3P 3PN:3P+N 4P	C:C型 D:D型 C: C type D: D type	63:63A 80:80A 100:100A	缺省:100mA Default: 100mA R1:30mA R2:50mA R4:300mA
SZRB2LE	125	2P	C	63	/

订货代号即: SZRB2LE1252PC63
Order code: SZRB2LE1252PC63

SZRB2LE- 125系列剩余电流动作断路器具有以下功能
The SZRB2LE-125 series residual current operated circuit breaker has the following functions

漏电保护
Leakage protection

短路保护
Short circuit protection

过载保护
Overload protection

技术参数 Technical parameter

额定电流 Rated current	63,80,100A
额定工作电压 Rated working voltage	230/400V AC
极数 No. of poles	1P+N/2P/3P/3P+N/4P
脱扣曲线 Tripping curve	C: 8.5In D: 12In
分断能力 Breaking capacity	10kA
漏电保护类型 Leakage protection type	AC型 AC type
额定剩余动作电流 Rated residual operating current	30mA,50mA,100mA,300mA
机械寿命 Mechanical life	10000次 10000 times
电气寿命 Electrical life	4000次 4000 times
脱扣指示 Tripping indication	漏电模块操作脱扣按钮突起剩余电流动作脱扣指示 Leakage module operating trip button protrusion, residual current operation trip indication
手动控制 Manual control	断路器和剩余电流动作装置分别复位，剩余电流动作防止暂态过电压（闪电、电网操作等）引起的误动作 The circuit breaker and residual current operating device are reset separately, and residual current operation prevents misoperation caused by transient overvoltage (lightning, grid operation, etc.)
环境 Environment	使用环境温度 Operating ambient temperature：-20℃~60℃
海拔高度 Altitude	≤2000m

接线 Wiring	端子接线面积 适用于50mm²及以下导线 Terminal wiring area Suitable for wire of 50mm² and below
安装 Installation	模块化结构，可方便地安装在DIN标准导轨上 额定扭矩: 3.5Nm Modular structure enables easy installation on standard DIN rail Rated torque: 3.5Nm
附件 Accessory	OF辅助触头(左装)，SD报警触头(左装) OF auxiliary contact (left mounted), SD alarm contact (left mounted)

■ 符合标准 Executive standard： GB/T 1408.2/IEC 60947-2
■ 符合认证 Executive certification：

对突然施加或缓慢上升的剩余正弦交流电流能确保脱扣
It can ensure the tripping of residual sinusoidal AC current that is suddenly applied or slowly rising

脱扣特性 Tripping characteristic

■ C型曲线 C type curve
□保护常规负载和配电线缆
□脱扣特性：瞬时脱扣范围(6.8~10.2)In
□Protection of general load and distribution cable
□Tripping characteristic: instantaneous tripping range (6.8~10.2) In

■ D型曲线 D type curve
□保护起动电流大的冲击性负荷
□脱扣特性：瞬时脱扣范围(9.6~14.4)In
□Protection of the impact load with high starting current
□Tripping characteristic: instantaneous tripping range (9.6~14.4) In

功能概述 Function overview

外形及安装尺寸图 Outline and mounting dimension diagram

外形及安装尺寸见图1
The outline and mounting dimension is shown in Figure 1

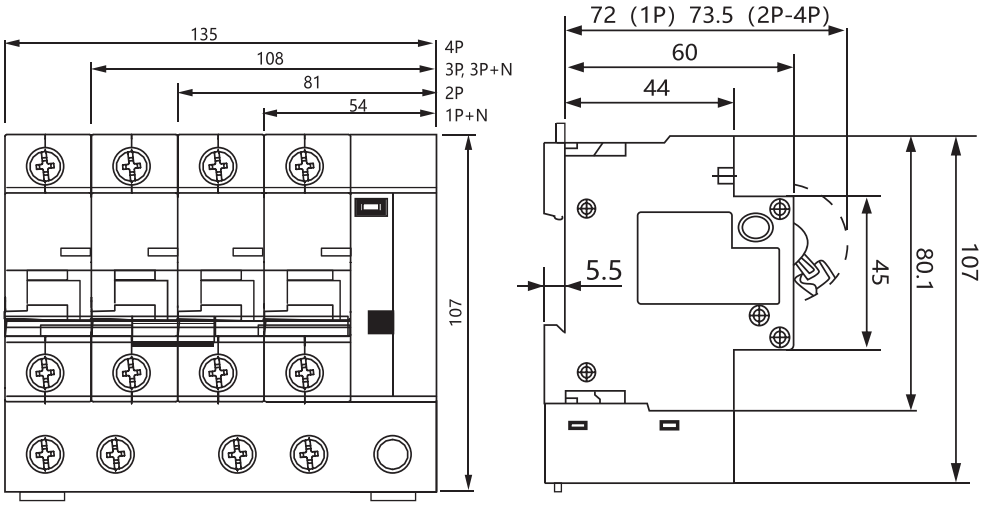

图1 外形及安装尺寸图
Figure 1 Outline and mounting dimension diagram

接线图如下。输入端电源，输出端接负载。
The wiring diagram is as follows. Input end is connected to power supply, and output end is connected to load.

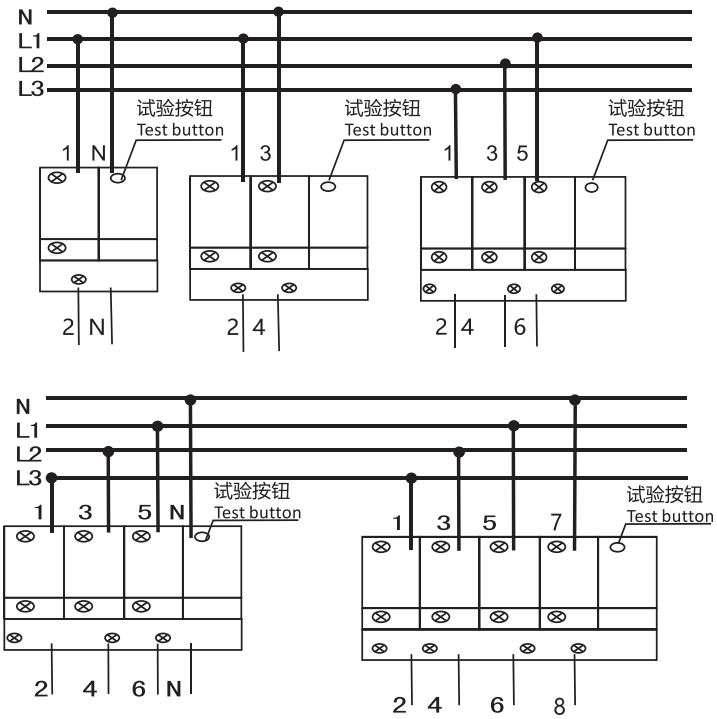

产品名称 Product name	宽度(mm) Width (mm)	电压范围(V) Voltage range (V)
远程控制附件 OF 辅助触头 外接电路，指示断路器的合分状态 辅助触头的基本形式：一常开，一常闭 接线能力：1-4mm导线 触点容量：230V 3A ; 400V 1A Remote control accessory OF Auxiliary contact External circuit, indicating the on/off status of the circuit breaker Basic form of auxiliary contact: 1NO, 1NC Wiring capability: 1-4mm wire Contact capacity: 230V 3A; 400V 1A	9	AC :415V/3A,240V/6A DC:130V/1A,48V/2A,2
SD 报警触头 断路器故障脱扣时发出信号 前面板上有机械指示，可指示故障脱扣 辅助触头的基本形式：一常开，一常闭 接线能力：1-4mm导线 触点容量：230V 3A ; 400V 1A SD Alarm contact It sends signal when the circuit breaker trips due to fault There is a mechanical indicator on the front panel that can indicate fault tripping Basic form of auxiliary contact: 1NO, 1NC Wiring capability: 1-4mm wire Contact capacity: 230V 3A; 400V 1A	9	AC :415V/3A,240V/6A DC:130V/1A,48V/2A,2
脱扣附件 MX 分励脱扣器 外接电路，指示断路器的分合状态 当得到信号后，触发与之拼装的断路器脱扣 接线能力：1-4mm导线 额定工作电压：AC230V(脱扣电压AC/DC110-400V) DC24V(脱扣电压AC/DC24V-48V) Tripping accessory MX Shunt release External circuit, indicating the on/off status of the circuit breaker After receiving the signal, it triggers the circuit breaker assembled with it to trip Wiring capability: 1-4mm wire Rated working voltage: AC230V (trip voltage AC/DC110-400V) DC24V (trip voltage AC/DC24V-48V)	18 18	AC :130V–415V; DC:110–130V AC /DC:24V–48V;
脱扣附件 MX+OF (无源型) MX+OF分励+辅助 外接电路，指示断路器的分合状态 当得到信号后，触发与之拼装的断路器脱扣 辅助触头的基本形式：一常开，一常闭 接线能力：1-4mm导线 额定工作电压：AC230V(脱扣电压AC/DC110-400V) DC24V(脱扣电压AC/DC24V-48V) Tripping accessory MX+OF (passive type) MX+OF shunt+auxiliary External circuit, indicating the on/off status of the circuit breaker After receiving the signal, it triggers the circuit breaker assembled with it to trip Basic form of auxiliary contact: 1NO, 1NC Wiring capability: 1-4mm wire Rated working voltage: AC230V (trip voltage AC/DC110-400V) DC24V (trip voltage AC/DC24V-48V)	18 18	AC :130V–415V; DC:110–130V AC /DC:24V–48V;

产品名称 Product name	宽度(mm) Width (mm)	电压范围(V) Voltage range (V)

MV 过压脱扣器
对线路过电压故障进行保护
当脱扣器两端电压上升至额定范围时，
触发与之拼装的断路器脱扣
前面板上有故障脱扣指示，复位按钮弹起，
为过压脱扣
接线能力：25mm
额定工作电压：230V(过压脱扣值270V±5%)
MV Overvoltage release
It protects against overvoltage fault in the circuit
When the voltage at both ends of the release rises to the rated range,
it triggers the circuit breaker assembled with it to trip
There is a fault trip indicator on the front panel, it indicates overvoltage trip when the reset button pops up
Wiring capacity: 25mm
Rated working voltage: 230V (overvoltage trip value 270V±5%)

MV | 18 | AC:230V

MN 欠压脱扣器
对线路欠电压故障进行保护
当脱扣器两端电压下降至额定范围时，
触发与之拼装的断路器脱扣
前面板上有故障脱扣指示，复位按钮弹起，
为欠压脱扣
接线能力：25mm
额定工作电压：230V(欠压脱扣值170V±5%)
MN Undervoltage release
It protects against undervoltage fault in the circuit
When the voltage at both ends of the release drops to the rated range,
it triggers the circuit breaker assembled with it to trip
There is a fault trip indicator on the front panel, it indicates undervoltage trip when the reset button pops up
Wiring capacity: 25mm
Rated working voltage: 230V (undervoltage trip value 170V±5%)

MN | 18 | AC:230V

MV+MN欠过压脱扣器
对线路过电压和欠电压故障进行保护
当脱扣器两端电压上升或下降至额定范围时，
触发与之拼装的断路器脱扣
前面板上有故障脱扣指示，复位按钮弹起，
为过压或欠电压脱扣
接线能力：25mm
额定工作电压：230V(过压脱扣值270V±5%)(欠压脱扣值170V±5%)
MV+MN Overvoltage/undervoltage release
It protects against overvoltage and undervoltage fault in the circuit
When the voltage at both ends of the release rises or drops to the rated range,
it triggers the circuit breaker assembled with it to trip
There is a fault trip indicator on the front panel, it indicates overvoltage or undervoltage trip when the reset button pops up
Wiring capacity: 25mm
Rated working voltage: 230V (overvoltage trip value 270V±5%) (undervoltage trip value 170V±5%)

MV+MN | 18 | AC:230V

编码原则 Coding principle

SZRG2系列模数化隔离开关 SZRG2 Series modular isolation switch

产品名称 Product name	壳架等级 Frame size	极数 No. of poles	额定电流 Rated current
SZRG2	125	2P	63A
	125:125型 125:125 type	1P 2P 3P 4P	32:32A 63:63A 100:100A 125:125A
SZRG2	125	2P	63

订货代号即: SZRG21252P63
Order code: SZRG21252P63

SZRG2系列模数化隔离开关具有以下功能:
The SZRG2 series modular isolation switch has the following functions:

隔离	Isolation
带负荷分断和接通线路	With load breaking and making line

技术参数 Technical parameter

额定电流 Rated current	32,63,100,125A
额定工作电压 Rated working voltage	230/400V AC
隔离功能 Isolation function	手柄带指示，分断指示 Handle with indication, switch-off indication
机械寿命 Mechanical life	50000次 50000 times
电气寿命 Electrical life	使用类别: AC-22 Cosϕ=0.6 Utilization category: AC-22 Cos ϕ=0.6 32A、63A: 30000次 32A, 63A: 30000 times 100A、125A:20000次 100A, 125A: 20000 times
冲击耐受电压 Impulse withstand voltage	4kV
使用类别 Utilization category	AC-20B
额定短时耐受电流Rated short-time withstand current	17kA
环境 Environment	工作温度Working temperature: -30℃~70℃
海拔高度 Altitude	≤2000m

接线 Wiring	上下连接方式 端子接线面积 Upper and lower wiring method Terminal wiring area
安装 Installation	适用于50mm²及以下导线 模块化结构，可方便地安装在DIN标准导轨上 额定扭矩：3.5Nm Suitable for wire of 50mm² and below Modular structure enables easy installation on standard DIN rail Rated torque: 3.5Nm

■ 符合标准 Executive standard：	GB/T 14048.3/IEC 60947-3
■ 符合认证 Executive certification：	CCC

功能概述 Function overview

外形及安装尺寸图 Outline and mounting dimension diagram

外形及安装尺寸
SZRG2-125为导轨安装，外形及安装尺寸(见图1)
Outline and mounting dimension
SZRG2-125 is for DIN rail installation, see Figure 1 for outline and mounting dimension

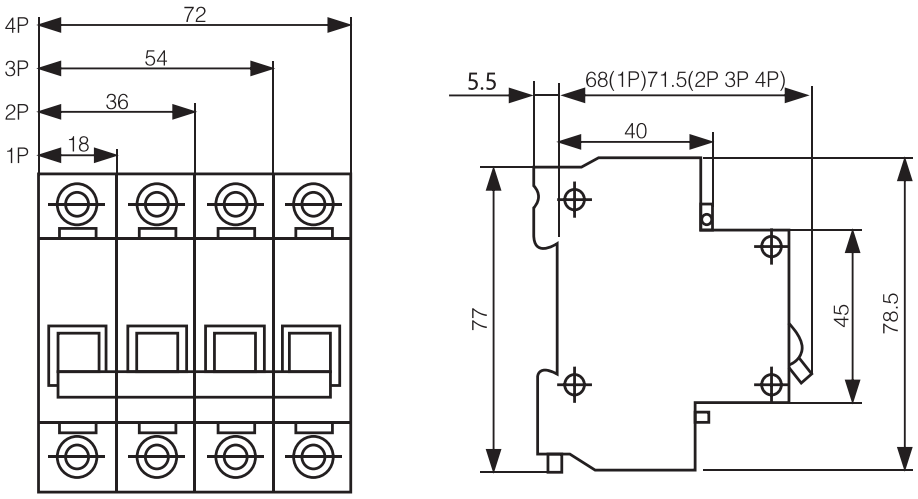

图1 外形及安装尺寸
Figure 1 Outline and mounting dimension

编码原则 Coding principle

SZRGQ系列自复式过欠压保护器 SZRGQ Series self-reset overvoltage/undervoltage protective device

产品名称 Product name	额定电流 Rated current	极数 No. of poles
SZRGQ	63A	1P+N
	32:32A 40:40A 50:50A 63:63A 80:80A 100:100A	1PN:1P+N 3PN:3P+N
SZRGQ	63	1PN

订货代号即: SZRGQ631PN
Order code: SZRGQ631PN

SZRGQ系列自复式过欠压保护器具有以下功能:
The SZRGQ series self-reset overvoltage/undervoltage protector has the following functions:

过电压保护、欠电压保护、缺相保护、断零保护
当电源电压恢复正常，保护器经延时后，自动接通电源，恢复供电
当电路中由于发生中性线断线，相线与中性线错接和三相负载严重不平衡引起的单相过电压时，自动断开电源，防止用电设备损坏

Overvoltage protection , Undervoltage protection , Phase loss protection ,Neutral disconnection protection
When the power supply voltage returns to normal, the protective device will automatically turn on the power after a delay and restore power supply
When the single-phase overvoltage is caused by neutral line disconnection, misconnection of phase and neutral lines and severe imbalance of three-phase loads, the power supply will be automatically disconnected to prevent damage to the electrical equipment

技术参数 Technical parameter

极数 No. of poles	1P+N	3P+N
额定电流 Rated current	32,40,50,63,80,100A	
过压动作切断值 Overvoltage operation cut-off value	AC 275±5V	AC 460±15V
过压恢复值 Overvoltage recovery value	AC 245±5V	AC 425±15V
欠压动作切断值 Undervoltage operation cut-off value	AC 175±5V	AC 300±15V
欠压恢复值 Undervoltage recovery value	AC 195±5V	AC 335±15V
断电后送电延时 Power delay after power outage	≤60秒 ≤60s	
自身功耗 Power loss	≤1W	≤2W
冲击耐受电压Uimp Impulse withstand voltage Uimp	4kV	
电气寿命 Electrical life	≥10万次 ≥10^5 times	
保护类型 Protection type	AC类 Class AC	
额定工作电压(UeAC) Rated operating voltage (UeAC)	230V	400V

使用环境 Usage environment	工作温度：-5℃~40℃ 海拔：不超过2000m 抗湿热性：2类(温度55℃时，相对湿度95%) 安装环境：无显著振动和冲击的地方 Working temperature: -5℃~40℃ Altitude: ≤2000m Moisture and heat resistance: Class 2 (RH 95% at a temperature of 55℃) Installation environment: places without significant vibration and impact

- 接线：下进线 Wiring: Lower incoming line
- 导线尺寸：35mm² Wire size: 35mm²
- 安装: 35mm²标准DIN导轨、水平安装，垂直安装
- Installation: 35mm² standard DIN rail, horizontal installation, vertical installation
- 拧紧力矩: 2.5Nm Tightening torque: 2.5Nm
- 符合标准:《民用建筑电气设计规范》JGJ-242 2011版
- Compliant with the standard: *Code for Electrical Design of Civil Buildings* JGJ-242 2011 version
  GB/T 14048.5/IEC 60947-5

功能概述 Function overview

外形及安装尺寸图 Outline and mounting dimension diagram

外形及安装尺寸，见图1 Outline and mounting dimension, see Figure 1

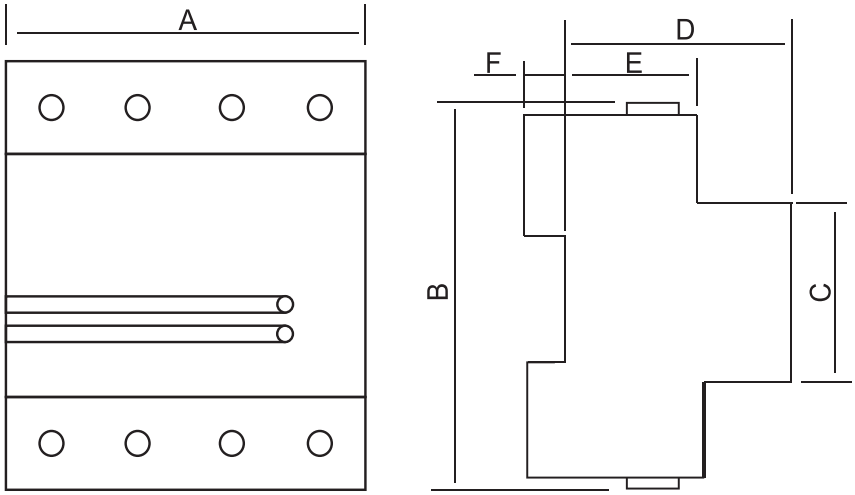

额定电流(A) Rated current (A)	32,40,50,63A,80A,100A	32,40,50,63A,80A,100A
尺寸(mm) Dimension(mm) / 极数 No. of poles	1P+N	3P+N
A	36±0.5	72±0.5
B	80	80.5
C	46	46
D	60	60
E	38	38
F	5	5

图1 SZRGQ外形及安装尺寸
Figure 1 Outline and mounting dimension of SZRGQ

编码原则 Coding principle

SZRY1系列电涌保护器 SZRY1 Series surge protective device

产品名称 Product name	实验类型 Test type	最大放电电流 Maximum discharge current	极数 No. of poles	最大持续电压 Maximum continuous voltage	附件 Accessory
SZRY1	k	60kA	2P	AC385V	/
	省略:II类 K: I类 Default: Class II K: Class I	20:20A 40:40A 60:60A 80:80A 100:100A	1P 2P 3P 4P 1PN:1P+N 3PN:3P+N	275:AC275V 340:AC340V 385:AC385V 440:AC440V	缺省：无 YX：遥信 Default: None YX: Remote signaling
SZRY1		60	2P	385	/

订货代号即: SZRY1 602P385
Order code: SZRY1 602P385

SZRY3系列电涌保护器应用范围及执行标准
Application scope and executive standard of SZRY3 series surge protective device

- 用于抑制瞬态过压低于设备耐受冲击过电压，泄放电涌能量，从而保护系统电路及设备。
- 适合与其它系列电涌保护器分级配合，实现层迭式保护体系，使低压配电系统得到更广泛，更有效的保护。
- 环境温度： -5℃~+55℃
- 符合标准：GB/T 18802.1/1EC 61643-1

It's used to suppress transient overvoltage below the device's withstand impulse overvoltage, discharge surge energy, so as to protect system circuits and equipment.
It's suitable for graded coordination with other series of surge protective devices to achieve a layered protection system, enabling low-voltage distribution system to receive more extensive and effective protection.
Ambient temperature: -5℃~+55℃
Executive standard: GB/ T18802.1/1EC 61643-1

SZRY3系列电涌保护器技术参数 Technical parameters of SZRY3 series surge protective device

规格型号 Model and specification	SZRY1 -20	SZRY1 -40	SZRY1 -60	SZRY1 -80	SZRY1 -100	SZRY1K -12.5	SZRY1K -15	SZRY1K -25	SZRY1K -50
最大放电电流Imax kA Maximum discharge current Imax kA	20	40	60	80	100	/	/	/	/
冲击电流Iimp kA Impulse current Iimp kA	/	/	/	/	/	12.5	15	25	50
标称放电电流In kA Nominal discharge current In kA	10	20	30	40	50	/	/	/	/
推荐后备保险丝gL A Recommended backup fuse gL A	63	125	160	200	250	160	200	315	400
最大持续工作电压Uc V Maximum continuous working voltage Uc V	275/340/385/440					275/340/385			
电压保护水平Up kV Voltage protection level Up kV	1.3/1.5 1.6/1.8	1.5/1.8 1.8/2.0	1.6/1.9 2.0/2.2	2.2/2.5 2.5/2.8	2.3/2.5 2.5/2.8	1.6/2.0/2.2		1.8/2.0/2.5	
相应时间 ms Corresponding time ms	≤25							≤100	
波形 us Waveform us	8/20					10/350			
实验类型 Test type	II级 Class II					I级 Class I			
极数 No. of poles	1P,1P+N,2P,3P,3P+N,4P								
工作状态指示 Work status indication	绿色：正常 Green: Normal　红色：失效 Red: Invalid							无色:正常 Colorless: Normal 红色:失效 Red: Invalid	
接线能力 Wiring capacity	硬线:≤35mm²; Hard wire: ≤35mm²; 软线: 2. 5mm²~25mm²; Flexible wire: 2.5mm²~25mm²;								
单极宽度 mm Single phase width mm	18			27		18		36	

附件 Accessory	
遥信YX Remote signaling YX	
额定工作电压Ue Rated working voltage Ue	125V
额定工作电流Ie Rated working current Ie	1A
触点 Contact	一个常开触点，一个常闭触点 1NO contact, 1NC contact
功能 Function	当SPD模块失效脱离后，常开触点将闭合,常闭触点将断开，送出故障信息 When the SPD module fails and disengages, the normally open contact will close and the normally closed contact will open, sending out a fault message

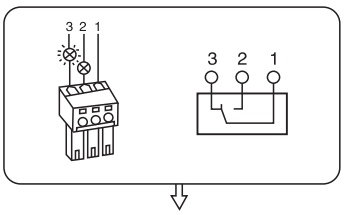

接线能力 Wiring capacity：1.5mm^2(max)
Umax: AC125V Imax：1A

功能概述 Function overview

外形及安装尺寸图 Outline and mounting dimension diagram

外形及安装尺寸(单位: mm) Outline and mounting dimension (unit: mm)

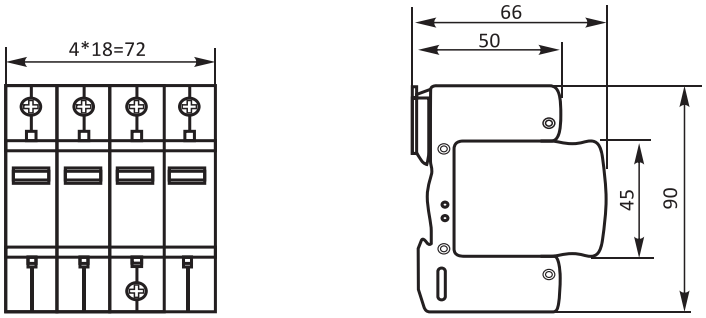

SZRY1-20/SZRY1-40/SZRY1-60

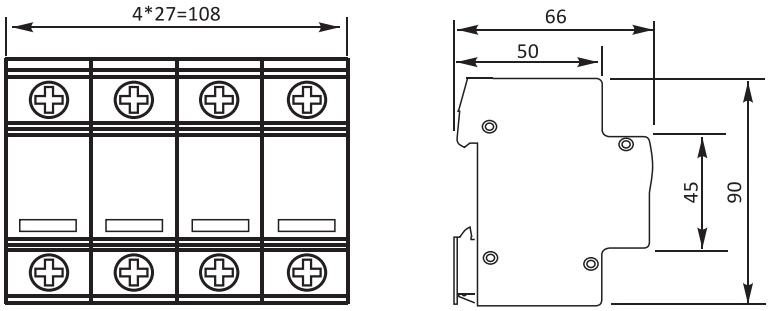

SZRY1-80/SZRY1-100

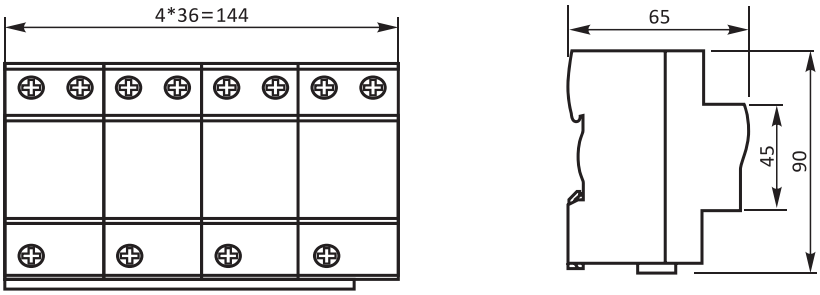

SZRY1K-12.5/SZRY1-15/SZRY1K-25/SZRY1K-50

附件 Accessory

SZRC1-09~95A附件装配位置示意图

SZRC1-09~95A Accessory assembly position diagram

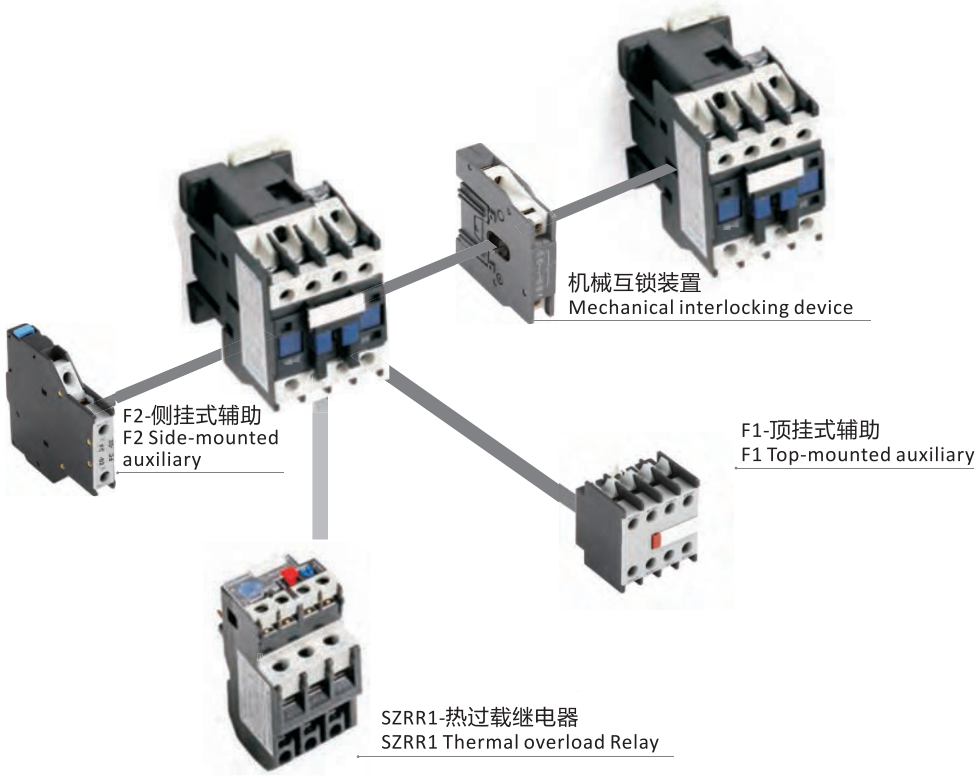

编码原则 Coding principle

SZRC1系列交流接触器 SZRC1 Series AC contactor

产品名称 Product name	额定电流 A Rated current A	辅助触头 Auxiliary contact	线圈电压代号 Coil voltage code	线圈频率 Coil frequency
SZRC1	09	10	AC220V	/
	09,12 18,25 32,40 50,63 80,95	SZRC1-09~32: 10:1常开+0常开 01:0常开+1常开 10: 1NO+0NO 01:0NO+1NO SZRC1-40~95: 11:1常开+1常开 11: 1NO+1NO	B:24V C:36V E:48V F:110V M:220V Q:380V	缺省: 50/60HZ Default: 50/60HZ
SZRC1	09	10	220	/

订货代号即：SZRC10910220
Order code: SZRC10910220

技术参数 Technical parameter

- 额定工作电压：380V
- 电流规格：9~95A
- 环境温度：-5℃~+55℃
- 污染等级为3级，安装位置应垂直，各方向的倾斜角度不超过22.5°
- 防护等级：IP20
- 符合标准：GB/T 14048.1/IEC 60947-1　GB/T 14048.4/IEC 60947-4-1
- 符合认证：
- 附件：F1-顶挂式辅助　F2-侧挂式辅助　S1-空气延时头

- Rated working voltage: 380V
- Current specification: 9~95A
- Ambient temperature: -5℃~+55℃
- The pollution level is 3, and the installation position should be vertical, with a tilt angle of no more than 22.5° in all directions
- Protection level: IP20
- Executive standard: GB/T 14048.1/IEC 60947-1　GB/T 14048.4/IEC 60947-4-1
- Executive certification:
- Accessory: F1-Top-mounted auxiliary　F2-Side-mounted auxiliary　S1-Air delay head

接触器型号 Contactor model		SZRC1 -09	SZRC1 -12	SZRC1 -18	SZRC1 -25	SZRC1 -32	SZRC1 -40	SZRC1 -50	SZRC1 -63	SZRC1 -80	SZRC1 -95
额定工作电流 Rated working current	Ie,AC-3 Ie,AC-1	12A 20A	12A 20A	18A 32A	25A 40A	32A 50A	40A 60A	50A 80A	63A 80A	80A 125A	95A 125A
额定绝缘电压 Rated insulation voltage (Ui)	660V										
额定工作电压 Rated working voltage (Ue)	380V										
极数 No. of poles	3极 3P										
额定工作功率 Rated working power (kW) AC-3	380	4	5.5	7.5	11	15	18.5	22	30	37	45
AC-3	电寿命(万次) Electrical life (10^4 times)	100	100	100	100	80	80	80	80	60	60
	操作频率(次/h) Operating frequency (times/h)	1200	1200	1200	1200	600	600	600	600	600	600
机械寿命(万次) Mechanical life (10^4 times)		1000	1000	1000	1000	800	800	800	800	800	800

线圈 Coil

额定控制电路电压 AC Rated control circuit voltage AC (US)	50Hz	24V,36V,48V,110V,127V,220V(230V),380V(400V),400V		
	50/60Hz	24V,36V,48V,110V,220V,230V,240V,380V,400V		
允许控制电路电压 Allowed control circuit voltage (US)	运行 Operation	85%~110%Us		
	释放 Release	20%~75%Us		
线圈功率 Coil power	吸合 Pull-in VA	70	110	200
	保持 Holding VA	8	11	20
	功耗 Power loss VA	1.8~2.7	3~4	6~10

端子接线能力 Terminal wiring capacity

		SZRC1 -09	SZRC1 -12	SZRC1 -18	SZRC1 -25	SZRC1 -32	SZRC1 -40	SZRC1 -50	SZRC1 -63	SZRC1 -80	SZRC1 -95
软线 Flexible wire 不带接线端子 Without wiring terminal	1根(导线截面mm^2) 1 pc (cross-sectional area mm^2)	1~4	1~4	1.5~10	2.5~10	2.5~25	2.5~25	2.5~25	2.5~25	4~50	4~50
	2根(导线截面mm^2) 2 pcs (cross-sectional area mm^2)	1~4	1~4	1.5~6	2.5~10	2.5~16	2.5~16	2.5~16	2.5~16	4~25	4~25
软线 Flexible wire 带接线端子 With wiring terminal	1根(导线截面mm^2) 1 pc (cross-sectional area mm^2)	1~4	1~4	1~6	1~10	2.5~25	2.5~25	2.5~25	2.5~25	4~50	4~50
	2根(导线截面mm^2) 2 pcs (cross-sectional area mm^2)	1~2.5	1~2.5	1~4	1.5~6	2.5~10	2.5~10	2.5~16	2.5~10	4~16	4~16
硬线 Hard wire 不带接线端子 Without wiring terminal	1根(导线截面mm^2) 1 pc (cross-sectional area mm^2)	1~4	1~4	1.5~6	1.5~10	2.5~25	2.5~25	2.5~25	2.5~25	4~50	4~50
	2根(导线截面mm^2) 2 pcs (cross-sectional area mm^2)	1~4	1~4	1.5~6	2.5~10	2.5~16	2.5~16	2.5~16	2.5~16	4~25	4~25

辅助触头 Auxiliary contact

约定发热电流(Ith) Conventional thermal current (Ith)	A	10
额定工作电压 (Ue) Rated working voltage (Ue)	交流 AC V	380
	直流 DC V	220
额定控制容量 Rated control capacity	AC-15VA	360
	DC-13 W	33

附件 Accessory

顶挂式辅助 Top-mounted auxiliary

安装位置 Installation position	极数 No. of poles	组成 Form NO	组成 Form NC	触点布局 Contact layout
顶端 Top	2	0	2	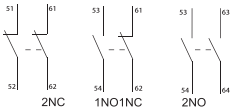 2NC 1NO1NC 2NO
		1	1	
		2	0	
	4	0	4	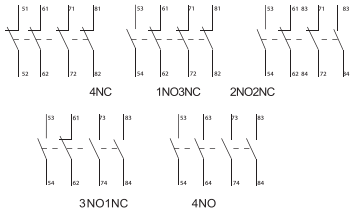 4NC 1NO3NC 2NO2NC 3NO1NC 4NO
		1	3	
		2	2	
		3	1	
		4	0	
侧挂式辅助 侧面 Side-mounted auxiliary Side	2	0	2	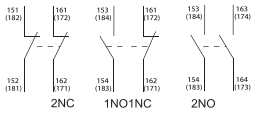 2NC 1NO1NC 2NO
		1	1	
		2	0	

功能概述 Function overview

外形及安装尺寸图 Outline and mounting dimension diagram

外形及安装尺寸
产品的外形及安装尺寸(见图1、图2及表1)。
Outline and mounting dimension
The outline and mounting dimension of the product (see Figure 1, Figure 2 and Table 1).

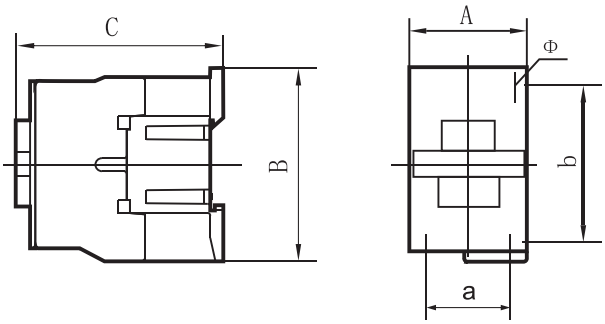

图1 SZRC1-09~32外形及安装尺寸
Figure 1 Outline and mounting dimension of SZRC1-09~32

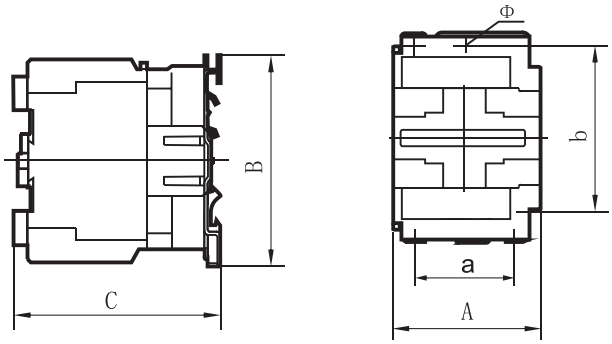

图2 SZRC1-40~95外形及安装尺寸
Figure 2 Outline and mounting dimension of SZRC1-40~95

表1 Table 1 (mm)

接触器型号 Contactor model	A max	B max	C max	a	b	Φ
SZRC1-09~12	46	75	82	35	50/60	4.5
SZRC1-18	46	75	87	35	50/60	4.5
SZRC1-25	57	84	95	40	48	4.5
SZRC1-32	57	84	99	40	48	4.5
SZRC1-40~63	76	127	112	40	104	6.5
SZRC1-80~95	86	127	125	40	104	6.5

编码原则 Coding principle

SZRR1系列热过载继电器 SZRR1 Series thermal overload relay

产品名称 Product name	壳架等级 Frame size	额定电流 Rated current		
SZRR1	25	0.10 ~ 0.16A		
	25 32 93	P16:0.10 ~ 0.16A P25:0.16 ~ 0.25A P4:0.25 ~ 0.40A P63:0.40 ~ 0.63A 1:0.63 ~ 1.0A 1P6:1.0 ~ 1.6A 2P5:1.6 ~ 2.5A	4:2.5 ~ 4.0A 6:4.0 ~ 6.0A 8:5.5 ~ 8.0A 10:7 ~ 10A 13:9 ~ 13A 18:12 ~ 18A 25:17 ~ 25A	32:23 ~ 32A 40:30 ~ 40A 50:37 ~ 50A 68:48 ~ 68A 70:55 ~ 70A 80:63 ~ 80A 93:80 ~ 93A
SZRR1	25	P16		

订货代号即: SZRR125P16
Order code: SZRR125P16

技术参数 Technical parameter

- 额定工作电压：380V
- 环境温度：-10~+55℃
- 符合标准：GB/T 14048.4/1EC60947-4-1
- 符合认证：

- Rated working voltage: 380V
- Ambient temperature: -10~+55℃
- Executive standard: GB/T 14048.4/1EC 60947-4-1
- Executive certification:

项目 Item	SZRR1-25	SZRR1-32	SZRR1-93
电流等级 Current level	25	32	93
额定绝缘电压 Rated insulation voltage	AC660V	AC660V	AC660V
断相保护 Phase failure protection	有 Available	有 Available	有 Available
手动与自动复位 Manual and automatic reset	手动 Manual	手动 Manual	手动 Manual
温度补偿 Temperature compensation	有 Available	有 Available	有 Available
脱扣指示 Trip indication	有 Available	有 Available	有 Available
复位按钮 Reset button	有 Available	有 Available	有 Available
安装方式 Installation method	插入式 独立式 Plug-in independent type	插入式 独立式 Plug-in independent type	插入式 独立式 Plug-in independent type
辅助触头 Auxiliary contact	1NO+1NC	1NO+1NC	1NO+1NC
AC-15 220V 额定电流 rated current A	1.64	1.64	1.64
AC-15 380V 额定电流 rated current A	0.95	0.95	0.95
DC-15 220V 额定电流 rated current A	0.2	0.2	0.2

型号 Model	电流调节范围(A) Current regulation range (A)	熔断器 Fuse A "1"型配合 "1" type coordination	熔断器 Fuse A "2"型配合 "2" type coordination	相匹配接触器型号 Matching contactor model
SZRR1-25	0.1-0.16	0.25	2	SZRC1-09 SZRC1-12 SZRC1-18 SZRC1-25
	0.16-0.25	0.5	2	
	0.25-0.4	1	2	
	0.4-0.63	1	2	
	0.63-1	2	4	
	1-1.6	2	4	
	1.6-2.5	4	6	
	2.5-4	6	10	
	4-6	8	16	
	5.5-8	12	20	
	7-10	12	20	
	9-13	16	25	
	12-18	20	35	
	17-25	25	50	
SZRR1-32	23-32	40	63	SZRC1-32
	28-32	40	80	
SZRR1-93	23-32	40	83	SZRC1-40 SZRC1-50 SZRC1-63 SZRC1-80 SZRC1-95
	30-40	63	100	
	37-50	68	100	
	48-65	80	100	
	55-70	80	125	
	63-80	100	160	
	80-93	125	200	

SZRR1热过载继电器附件 SZRR1 thermal overload relay accessory

1. SZRR1-25安装底座 SZRR1-25 mounting base
2. SZRR1-32安装底座 SZRR1-32 mounting base
3. SZRR1-93安装底座 SZRR1-93 mounting base

功能概述 Function overview

外形及安装尺寸图 Outline and mounting dimension diagram

热继电器的外形尺寸见图1~图3
The outline dimension of the thermal relay is shown in Figures 1~3

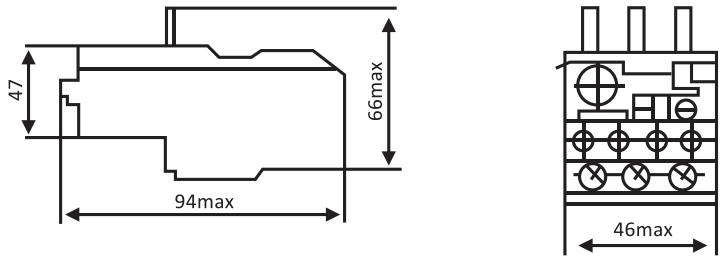

图 1SZRR1-25外形尺寸图
Figure 1 Outline dimension diagram of SZRR1-25

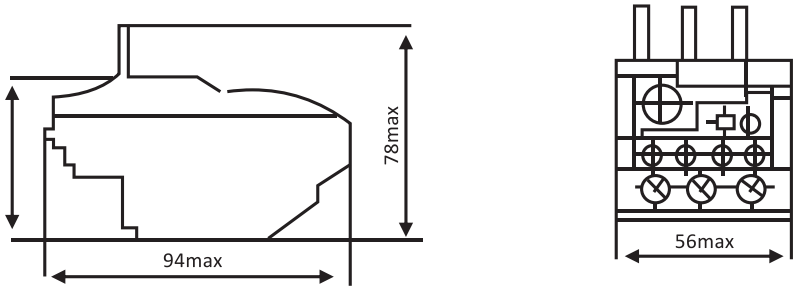

图 2 SZRR1-36外形尺寸图
Figure 2 Outline dimension diagram of SZRR1-36

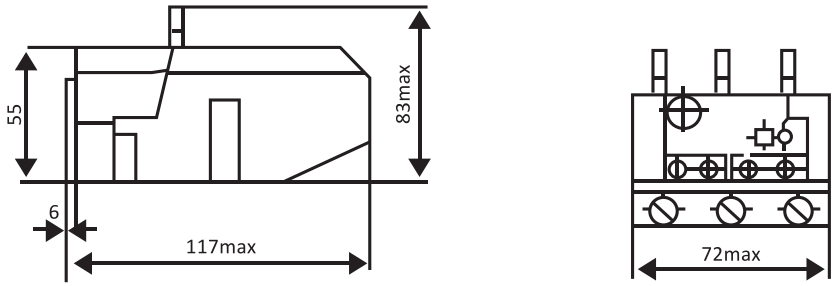

图 3 SZRR1-93外形尺寸图
Figure 3 Outline dimension diagram of SZRR1-93

编码原则 Coding principle

SZRV1系列户内中压真空断路器 SZRV1 Series indoor medium voltage vacuum circuit breaker

产品名称 Product name	类型 Type	额定电压 Rated voltage	操作机构 Operating mechanism	额定电流 Rated current	额定短路开断电流 Rated short-circuit breaking current	安装方式 Installation method
SZRV1	G	12	T	630	25	G
	常规：缺省 G：固封极柱 General: Default G: solid-sealed pole	12:12kV	T:弹簧机构 T: Spring mechanism	630:630A 1250:1250A	25:25kA 31.5:31.5kA	缺省:手车式 G:固定式 C:侧装式 Default: Handcart type G: Fixed type C: Side-mounted type
SZRV1	G	12	T	630	25kA	G

订货代号即: SZRBV1G-12/T630-25kA(G)
Order code: SZRBV1G-12/T630-25kA (G)

技术参数 Technical parameter

安装方式 Installation method	手车式、固定式、侧装式 Handcart type, fixed type, side-mounted type
频率 Frequency	50Hz
额定电流 Rated current	630A,1250A
额定短路开断电流 Rated short-circuit breaking current	25kA,31.5kA
额定短路持续时间 Rated short-circuit duration	4s
额定电压 Rated voltage	12kV
额定短时工频耐受电压(1min) Rated short-time power frequency withstand voltage (1min)	12kV:42/48(相间,对地/断口) 12kV: 42/48 (phase-phase, phase-to-ground/isolating distance)
额定雷电冲击耐受电压(峰值) Rated lightning impulse withstand voltage (peak)	12kV:75/85(相间,对地/断口) 12kV: 75/85 (phase-phase, phase-to-ground/isolating distance)
二次回路工频耐受电压(1min) Secondary circuit power frequency withstand voltage (1min)	2000V
机械寿命 Mechanical life	20000次 20000 times
环境 Environment	使用环境温度: -15℃至+40℃ Operating ambient temperature: -15℃ to +40℃
海拔高度 Altitude	≤3000m

外部条件：来自开关设备和控制设备外部的振动或地动是可以忽略的;
在二次系统中感应的电磁干扰的幅值不超过16kV;
运行条件：周围空气没有明显的受到尘埃、烟、腐蚀性和或可燃性气体、蒸发或盐雾的污染;
湿度条件：相对湿度的平均值不超过95%，月相对湿度平均值不超过90%;
水蒸气压力的平均值不超过2.2kPa，月水蒸气压力平均值不超过1.8kPa;
特殊使用条件：安装地点在海拔超过1000m、周围空气温度超过正常使用条件规定的限值或高湿产生凝露的地方，请与我们联系;

External conditions: Vibration or ground motion from outside the switchgear and controlgear can be ignored;
The amplitude of electromagnetic interference induced in the secondary system shall not exceed 16kV;
Operating condition: The ambient air is not significantly polluted by dust, smoke, corrosive and/or flammable gas, vapour or salt spray;
Humidity condition: The average relative humidity should not exceed 95%, and the monthly average relative humidity should not exceed 90%;
The average value of water vapor pressure shall not exceed 2.2kPa, and the average monthly water vapor pressure shall not exceed 1.8kPa;
Special usage condition: If the installation location exceeds an altitude of 1000m, the ambient air temperature exceeds the limit specified for normal usage condition, or high humidity causes condensation, please contact us;

符合标准：■ GB/T1984《高压交流断路器》
■ JB3855《户内交流高压真空断路器》
■ DL/T403《12kV-40.5kV高压真空断路器订货技术条件》

Executive standard: ■ GB/T1984 *Alternating current high-voltage circuit-breakers*
■ JB3855 *Indoor high-voltage alternating—current vacuum circuit-breaker*
■ DL/T403 *Technical conditions for ordering HV vacuum circuit-breaker for rated voltage 12kv to 40.5kv*

技术参数 technical parameter

SZRV1系列户内中压真空断路器 SZRV1 Series indoor medium voltage vacuum circuit breaker

项目 Item	单位 Unit	数值 Value	
额定电压 Rated voltage	kV	12	
额定短时工频耐受电压(1min) Rated short-time power frequency withstand voltage (1min)	kV	12kV: 42/48(相间.对地/断口) 12kV: 42/48 (phase-phase, phase-ground/isolating distance)	
额定雷电冲击耐受电压(峰值) Rated lightning impulse withstand voltage (peak)	kV	12kV: 75/85(相间.对地/断口) 12kV: 75/85 (phase-phase, phase-ground/isolating distance)	
额定频率 Rated frequency	Hz	50	
额定电流 Rated current	A	630 1250	630 1250
额定短路开断电流 Rated short-circuit breaking current	kA	25	31.5
额定短时耐受电流 Rated short-time withstand current	kA	25	31.5
额定短路持续时间 Rated short-circuit duration	S	4	
额定峰值耐受电流 Rated peak withstand current	kA	63	80
额定短路关合电流 Rated short-circuit closing current	kA	63	80
二次回路工频耐受电压(1min) Secondary circuit power frequency withstand voltage (1min)	V	2000	
额定单个/背对背电容器组开断电流 Rated breaking current of single/ back-to-back capacitor bank	A	630/400	
额定电容器组关合涌流 Rated closing inrush current of capacitor bank	kA	12.5(频率不大于1000Hz) 12.5 (frequency≤1000Hz)	
分闸时间(额定电压) Opening time (rated voltage)	ms	20-50	
合闸时间(额定电压) Closing time (rated voltage)	ms	35-100	
机械寿命 Mechanical life	次 time	20000	
额定电流开断次数(电寿命) Rated current breaking times (electrical life)	次 time	20000	
额定短路电流开断次数 Rated short-circuit current breaking times	次 time	50	
动、静触头允许磨损累计厚度 Allowable cumulative wearing thickness of moving and fixed contacts	mm	3	
额定合闸操作电压 Rated closing operation voltage	V	AC110/220 DC110/220	
额定分闸操作电压 Rated opening operation voltage	V	AC110/220 DC110/220	
储能电机额定电压 Rated voltage of energy storage motor	V	AC110/220 DC110/220	
储能电机额定功率 Rated power of energy storage motor	w	70	
储能时间 Energy storage time	S	≤15	
触头开距 Clearance between open contacts	mm	12kV:11±1	
超行程 Overtravel	mm	3.5±0.5	
触头合闸弹跳时间 Contact closing bounce time	ms	≤2	
三相分、合闸不同期性 Three-phase asynchronous opening and closing	ms	≤2	
平均分闸速度(触头分开~6mm) Average opening speed (contact opening~6mm)	m/s	12kV:1.1±0.2	
平均合闸速度(6mm~触头闭合) Average closing speed (6mm~contact closing)	m/s	0.6±0.2	
触头分闸反弹幅值 Contact opening rebound amplitude	mm	≤3	
主导电回路电阻(不含触臂) Main electrical circuit resistance (excluding contact arm)	μΩ	≤50(630A) ≤45(1250A)	
触头合闸接触压力 Contact closing contact pressure	N	2400±200(25kA) 3100±200(31.5kA)	
额定操作顺序 Rated operating sequence		分-0.3s-合分-180s-分合 Split -0.3s - Split -180s - Split - Split	

注 Note *: 1.侧装式 Side-mounted type 630-25kA 630-31.5kA 1250-25kA 1250-31.5kA

功能概述 Function overview

外形及安装尺寸图 Outline and mounting dimension diagram

VS1真空断路器手车式(包含常规，固封式)外型尺寸
VS1 vacuum circuit breaker handcart type (including general and sealed types) outline dimension

配650mm柜抽出式VS1- 12kV外形尺寸 Draw-out type VS1-12kV outline dimension when equipped with 650mm cabinet

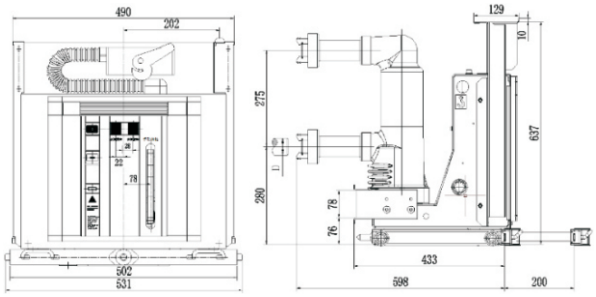

额定电流(A) Rated current (A)	额定短路开断电路(kA) Rated short-circuit breaking circuit (kA)	配合静电触头尺寸(mm) Matching electrostatic contact dimension (mm)
630	20,25,31.5	Φ35
1250	20,25,31.5	Φ49

动、静触头啮合尺寸不小于15mm ,一次相间距为150±1.5mm
The meshing size of the moving and fixed contacts shall not be less than 15mm, and the primary phase spacing shall be 150±1.5mm

配800mm柜抽出式VS1-12kV外形尺寸 Draw-out type VS1-12kV outline dimension when equipped with 800mm cabinet

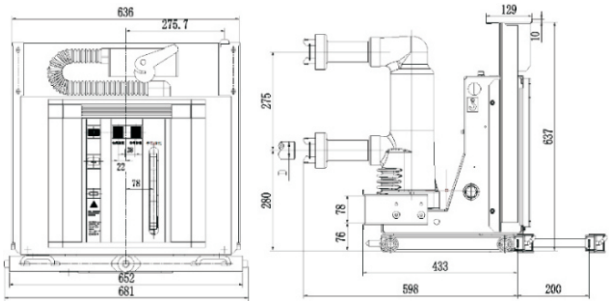

额定电流(A) Rated current (A)	额定短路开断电路(kA) Rated short-circuit breaking circuit (kA)	配合静电触头尺寸(mm) Matching electrostatic contact dimension (mm)
630	20,25,31.5	Φ35
1250	20,25,31.5	Φ49
1600	31.5,40	Φ55

动、静触头啮合尺寸不小于15mm ,一次相间距为210±1.5mm
The meshing size of the moving and fixed contacts shall not be less than 15mm, and the primary phase spacing shall be 210±1.5mm

配1000mm柜抽出式VS1-12kV外形尺寸 Draw-out type VS1-12kV outline dimension when equipped with 1000mm cabinet

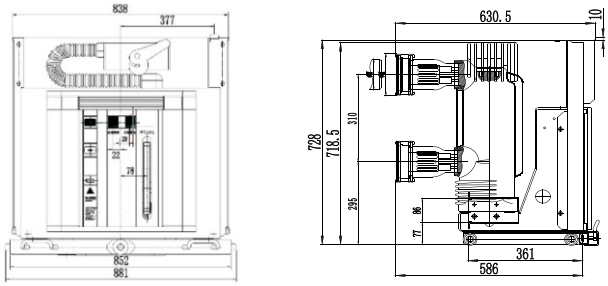

额定电流(A) Rated current (A)	额定短路开断电路(kA) Rated short-circuit breaking circuit (kA)	配合静电触头尺寸(mm) Matching electrostatic contact dimension (mm)
1600	31.5,40	Φ55
2000	31.5,40	Φ79
2500	31.5,40	Φ109
3150	31.5,40	Φ109

动、静触头啮合尺寸不小于15mm,一次相间距为275±1.5mm
The meshing size of the moving and fixed contacts shall not be less than 15mm, and the primary phase spacing shall be 275±1.5mm

配1000mm柜抽出式VS1-24kV外形尺寸 Draw-out type VS1-24kV outline dimension when equipped with 1000mm cabinet

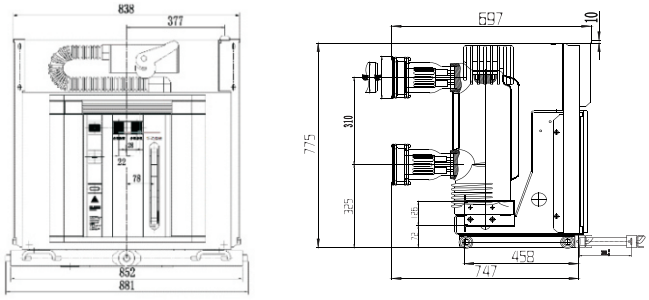

额定电流(A) Rated current (A)	额定短路开断电路(kA) Rated short-circuit breaking circuit (kA)	配合静电触头尺寸(mm) Matching electrostatic contact dimension (mm)
630	20,25,31.5	Φ35
1250	20,25,31.5	Φ49
1600	31.5,40	Φ55

动、静触头啮合尺寸不小于15mm,一次相间距为275±1.5mm
The meshing size of the moving and fixed contacts shall not be less than 15mm, and the primary phase spacing shall be 275±1.5mm

功能概述 Function overview

外形及安装尺寸图 Outline and mounting dimension diagram

VS1真空断路器固定式(包含常规，固封式)外型尺寸
VS1 Vacuum circuit breaker fixed type (including general and sealed types) outline dimension

配650mm柜抽出式VS1-12kV外形尺寸 Draw-out type VS1-12kV outline dimension when equipped with 650mm cabinet

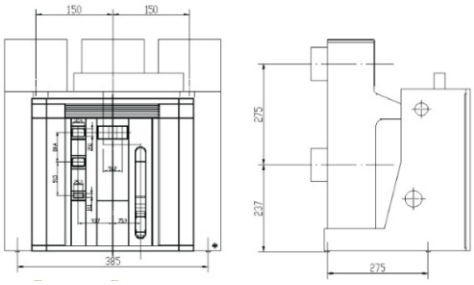

额定电流(A) Rated current (A)	额定短路开断电路(kA) Rated short-circuit breaking circuit (kA)
630	20,25,31.5
1250	25,31.5

配800mm柜抽出式VS1-12kV外形尺寸 Draw-out type VS1-12kV outline dimension when equipped with 800mm cabinet

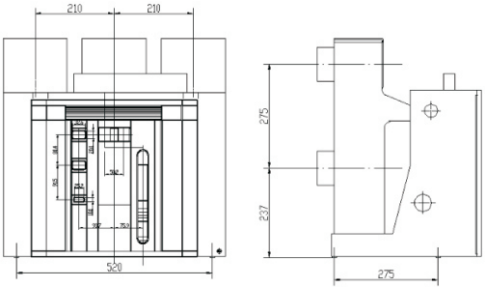

额定电流(A) Rated current (A)	额定短路开断电路(kA) Rated short-circuit breaking circuit (kA)
630	20,25,31.5
1250	20,25,31.5
1600	31.5,40

配1000mm柜抽出式VS1-12kV外形尺寸 Draw-out type VS1-12kV outline dimension when equipped with 1000mm cabinet

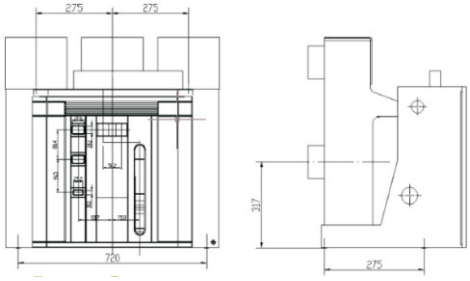

额定电流(A) Rated current (A)	额定短路开断电路(kA) Rated short-circuit breaking circuit (kA)
1600	31.5,40
2000	31.5,40
2500	31.5,40
3150	31.5,40

配1000mm柜抽出式VS1-24kV外形尺寸 Draw-out type VS1-24kV outline dimension when equipped with 1000mm cabinet

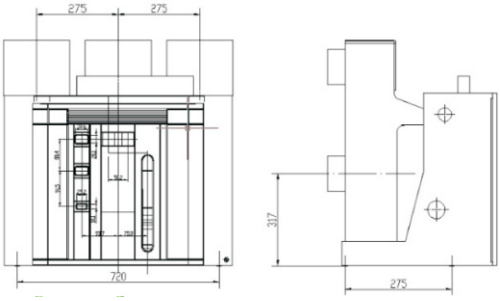

额定电流(A) Rated current (A)	额定短路开断电路(kA) Rated short-circuit breaking circuit (kA)	配合静电触头尺寸(mm) Matching electrostatic contact dimension (mm)
630	20,25,31.5	Φ35
1250	20,25,31.5	Φ49
1600	31.5,40	Φ55

VS1真空断路器侧装式(包含常规，固封式)外型尺寸
VS1 vacuum circuit breaker side mounted type (including general and sealed types) outline dimension

VS1-12kV外形尺寸 VS1-12kV outline dimension

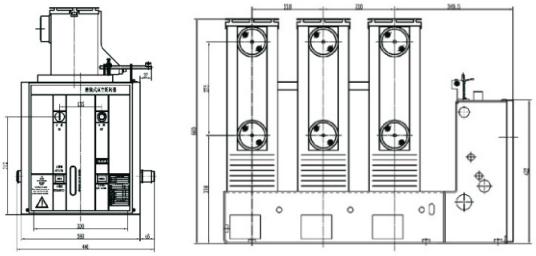

额定电流(A) Rated current (A)	额定短路开断电路(kA) Rated short-circuit breaking circuit (kA)
630	20,25,31.5
1250	20,25,31.5

ZOOREN®

江苏省中仁电气有限公司
JIANGSU ZOOREN ELECTRIC CO., LTD

地址：苏州市相城经济开发区漕湖产业园
Add: Caohu Industrial Park, Xiangcheng Economic Development Zone, Suzhou City
总机 Tel：0512-65909333
传真 Fax：0512-65907933
邮编 P.C.：215134
http://www.zooren.com
E-mail：zooren@zooren.com

版本号 Version No.：202311150101

代理商 Agents